DAFTAR ISI

1 ..... TL-007 ..... Silicon Transistor Tester
2-3..... PRE-1 Stereo Tape Head Playback Amplifier
4-5..... PRE-2 Stereo Tape Head Playback Amplifier
6-7..... TL-8 ..... 8 Watt BTL Hi-Fi Amplifier
8-9..... TL-10 .....10 Watt OTL Hi-Fi Amplifier
10-11..... TL-15 .....15 Watt OTL Hi-Fi Amplifier
12-13..... TL-18 .....20 Watt OCL Hi-Fi Amplifier
14-15..... TL-25 ..... 25 Watt OTL Hi-FI Amplifier
16-17..... TL-45 ..... 45 Watt OCL Hi-Fi Amplifier
18-19..... TL-70 ..... 70 Watt OCL Hi-Fi Amplifier
20-21..... TL-101 ..... 3 Way Discotic Lamp
22-23..... TL-102 ..... 3 Way Discotic Lamp
24-25..... TL-103 ..... 3 Way Discotic Lamp
26-27..... TL-103A .....3 Way Discotic Lamp
28..... TL-104 ..... 3 Way Electric Sign Flasher
29 ..... TL-105 ..... 3 Way Electric Sign Flasher
30-31..... TL-108 ..... Sequential Timer Control
32-33..... TL-109 ..... Discotic Lamp
34-35..... TL-110 ..... Electronic Strobo Light
36 ..... TL-201 .....Touch Switch - Door Bell Type
37 .....TL-202 ..... Light Control Switch
38 .....TL-203 ..... Light Control Switch
39 .....TL-204 ..... Light Control Switch
40-41.....TL-205 ..... Electronic Alarm
42-43.....TL-205A ..... Electronic Alarm
44-45.....TL-206 ..... Electronic Alarm
46-47.....TL-206A ..... Electronic Alarm
48-49.....TL-207 ..... Electronic Bird Sound
50-51.....TL-220 .....Light Control Switch
52 ..... F.M. Wireless Microphone
53 ..... DC-DC Converter ; VU Meter
54-55-56....TL-1002 .....T.V. Game
57 ....Lamp Dimmer Control
58 ....Transistor Model

SILICON TRANSISTOR TESTER

EKONOMIS

PRAKTIS

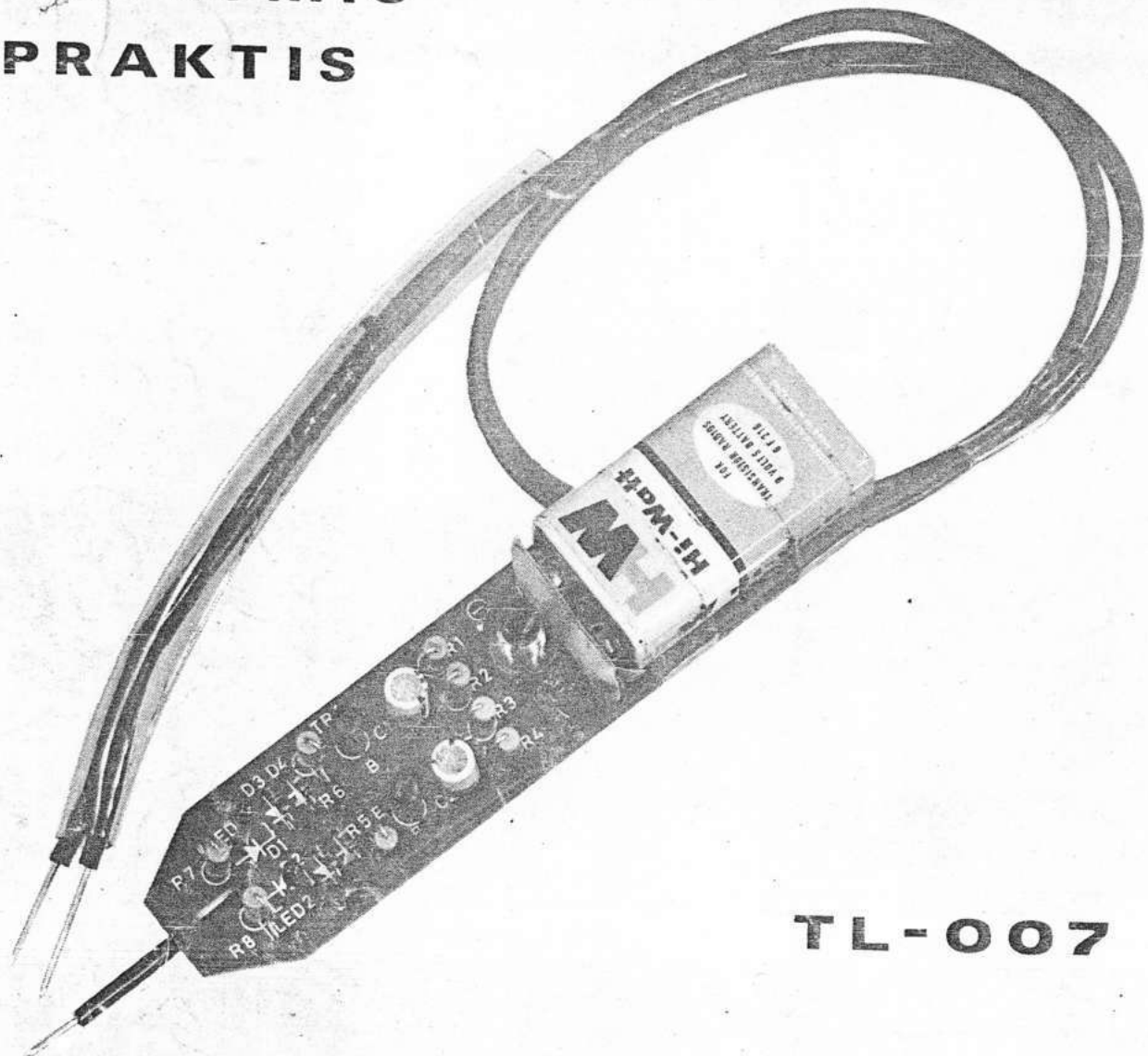

TL-007

SILICON TRANSISTOR TESTER

R.1.4	120
R.2.3	6,8K
R.5	100
R.6	150
R.7	220
R.8	470
C.1.2	33uF
D.1.2	L.E.D.
D.3.4.5.6	1N 4148
TR.1.2	FCS 9014

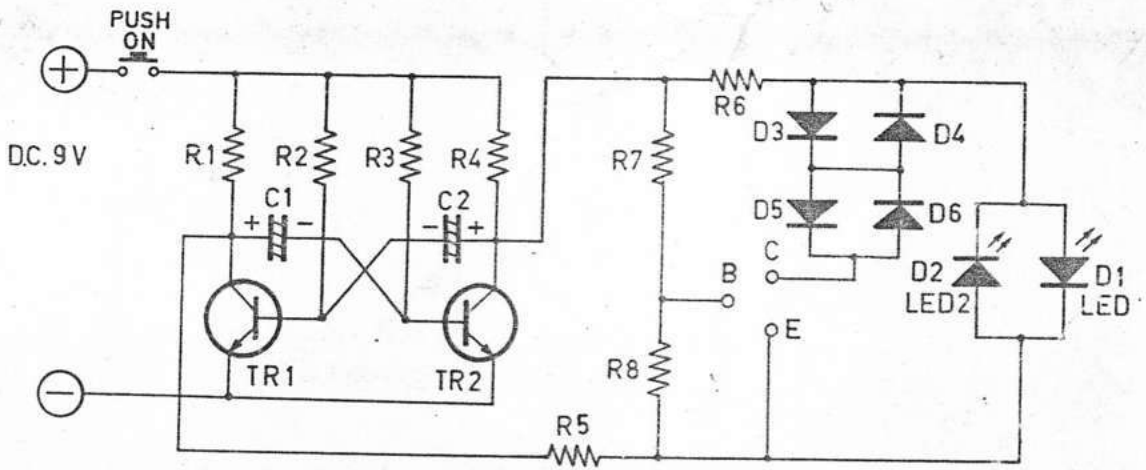

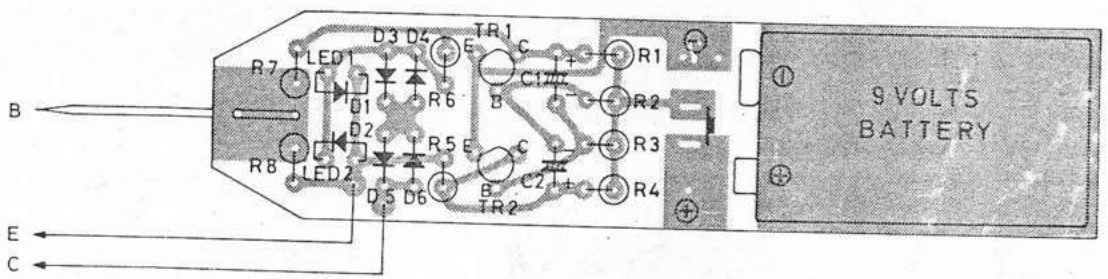

Bila L.E.D. 1 menyala berkedip-kedip menandakan Transistor jenis PNP dalam keadaan baik.

Bila L.E.D. 2 menyala berkedip-kedip menandakan Transistor jenis NPN dalam keadaan baik.

Bila L.E.D. kedua-duanya menyala atau padam menandakan Transistor dalam keadaan rusak.

TL-007

PRE - 1

PARTS LIST

R.1.101.8.108 100
R.2.102.5.105 ..... 4,7K
R.3.103.4.104 ..... 47K
R.6.106 ..... 470K
R.7.107 ..... 5,6K
R.9.109 ..... 22K
R.10.110 ..... 18K
R11. 111 220

R.12 ..... 1,8K
R.13 ..... 10K

C.1.101 ..... 500pF/10V
C.2.102 ..... 1 uF/10V
C.3.103.5.105 ..... 10uF/10V
C.4.104 ..... 12pF/10V
C.6.106 ..... 50KpF/10V

C.7.107 ..... 10uF/10V
C.8.108 ..... 22uF/10V
C.9. ..... 100uF/16V
C.10 ..... 47uF/12V

I.C. ..... AN 264
TR. ..... 4X ..... SE 4010
ZD. 12V

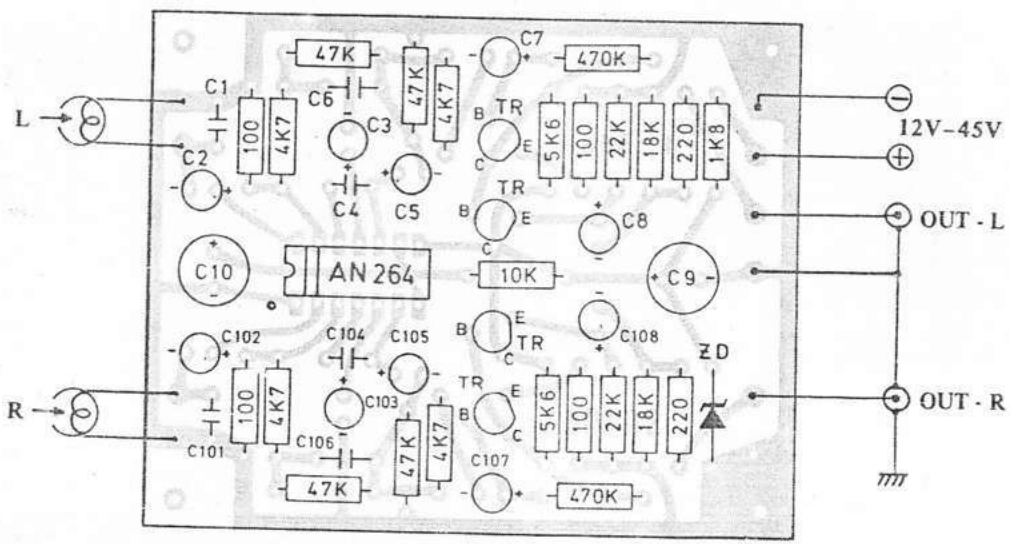

STEREO TAPE HEAD PLAYBACK AMPLIFIER

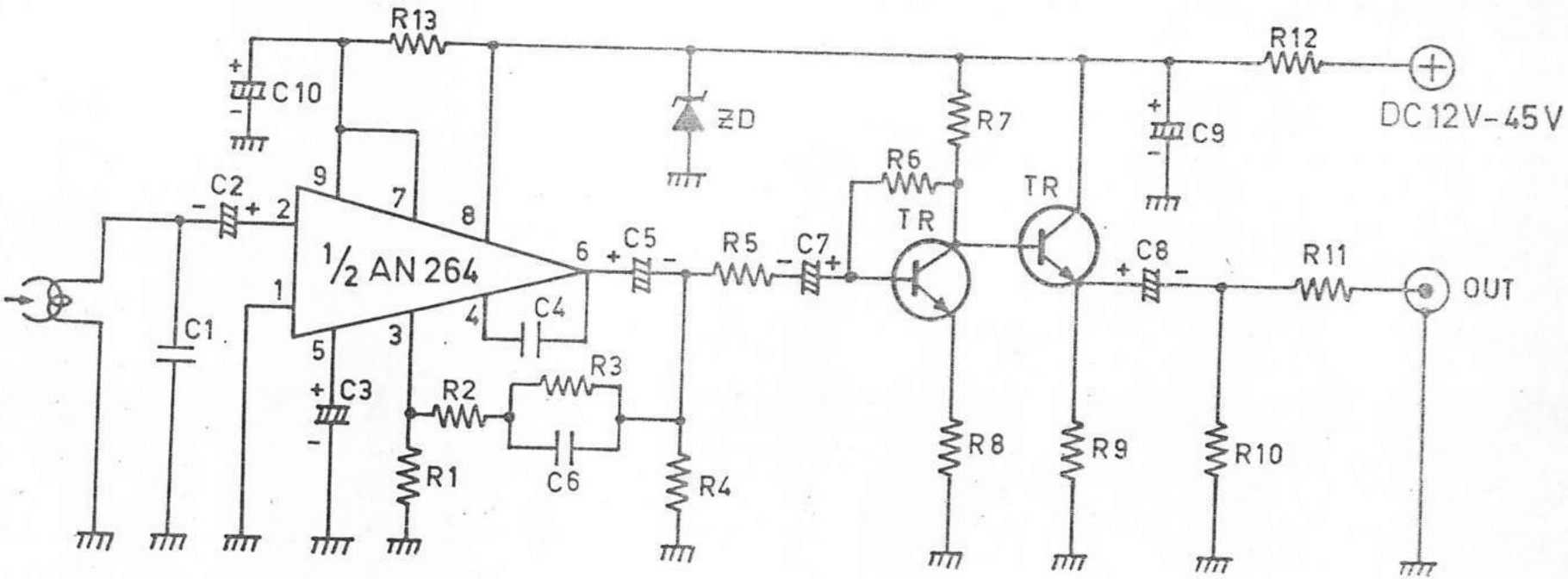

PRE - 1

CIRCUIT DIAGRAM

PRE - 2

PARTS LIST

R1. 101. 2. 102	1 M
R3. 103. 14	1 K
R4. 104	3,3K
R5. 105	180K
R6. 106	47K
R7. 107	2,2K
R8. 108	470K
R9. 109	27K
R10. 110	220
R11. 111	22K
R12. 112	33K
R13. 113	4,7K
R15.	220K
R16.	18K
C1. 101.	0,1uf50V
C2. 102. 5. 105.	10uf10V
C3. 103.	1 uf10V
C4. 104.	0,033uf50V
C6. 106.	12pf50V
C7. 107.	30uf10V
C8. 108.	10uf25V
C9.	100uf25V
C10.	200uf10V
IC	RC 4739
TR 4X	SE 4010
ZD	24V

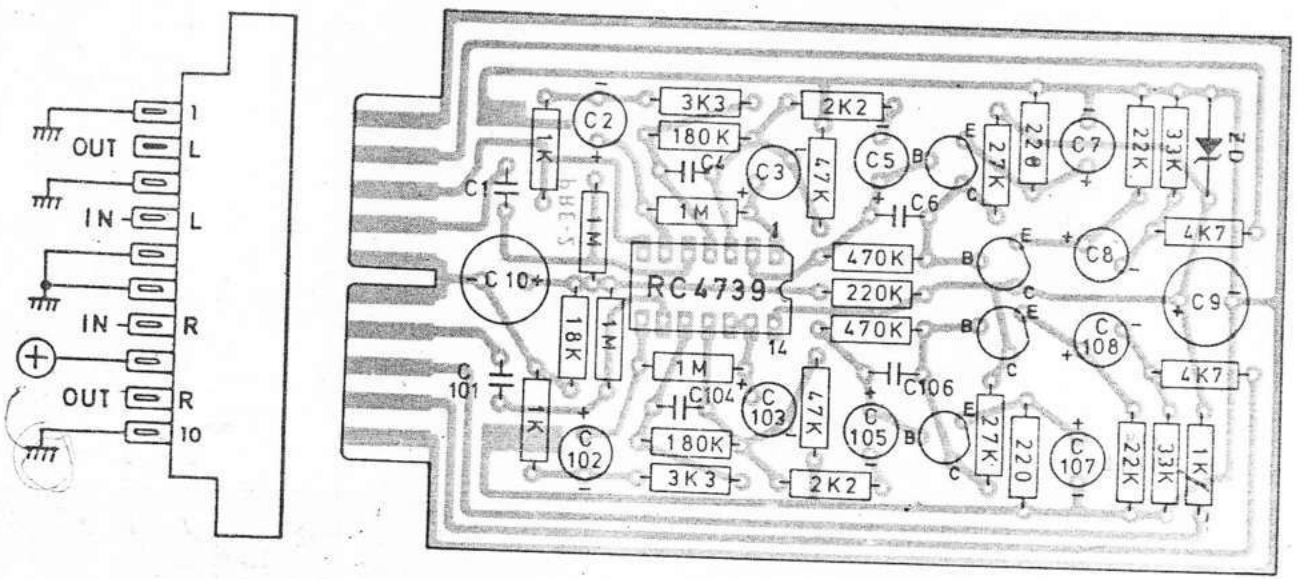

STEREO TAPE HEAD PLAYBACK AMPLIFIER

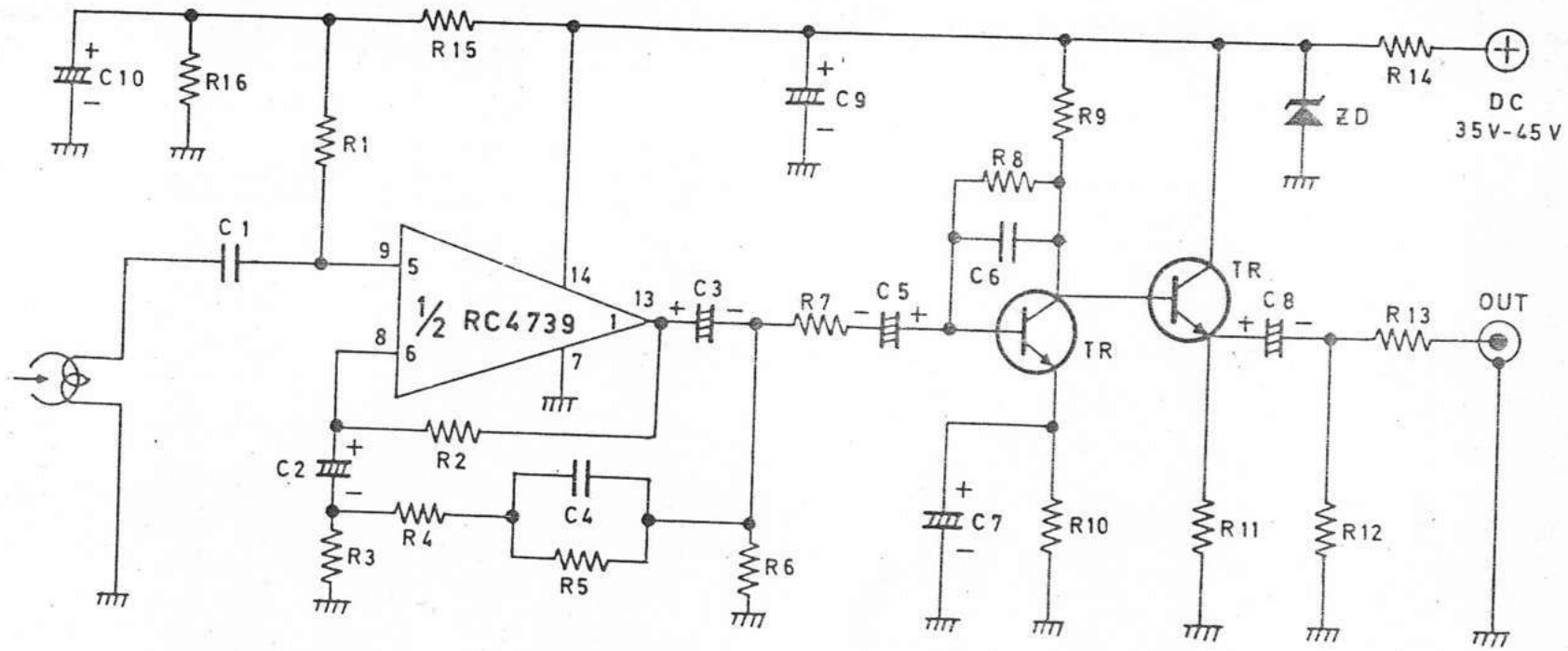

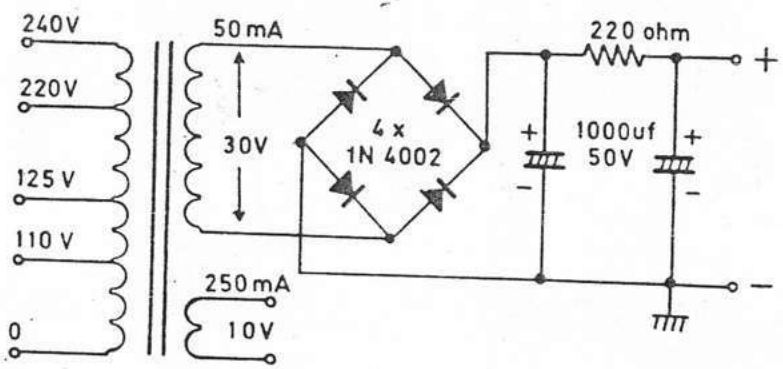

PRE - 2

CIRCUIT DIAGRAM

TL - 8

PARTS LIST

R1	47k
R2	180k
R3.12.37.38	10k
R4.26	1k
R5	82k
R6.25	470k
R7.19.35.40.41.42	470
R8	220k
R9.13.14.24	2.2k
R10.22	5.6k
R11	680
R15.16.17.18.28	4.7k
R20	1M
R21.27	100k
R23.36.39	1.2k
R29.30.32.43.44.45.46	100
R31	220
R33.34	22k
VR1	A 10k
VR2.3	B 50k
VR4.5	B100k
C1	390pf25V
C2	1uf10V
C3	33pf25V
C4.11.12.13	10uf16V
C5	33uf10V
C6.14.23	220uf10V
C7.8	5kpf25V
C9.10	0.1uf25V
C15.16.17.18	10uf16V
C19.20	47uf10V
C21.22	220pf25V
TR1.2.3.4	FCS9014
TR5.6.7.10	FCS9013
TR8.9	FCS9012
TR11.14	2SD317
TR12.13	2SB512
D1.2.3.4	CDG24

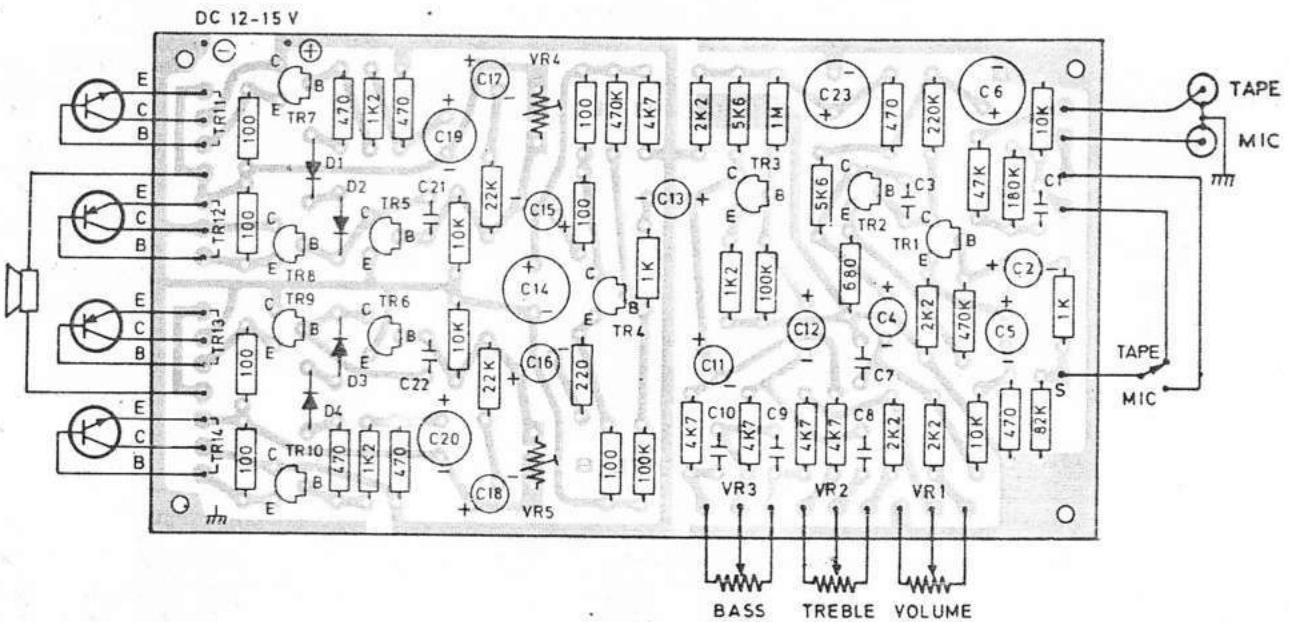

8 WATT BTL HI-FI AMPLIFIER

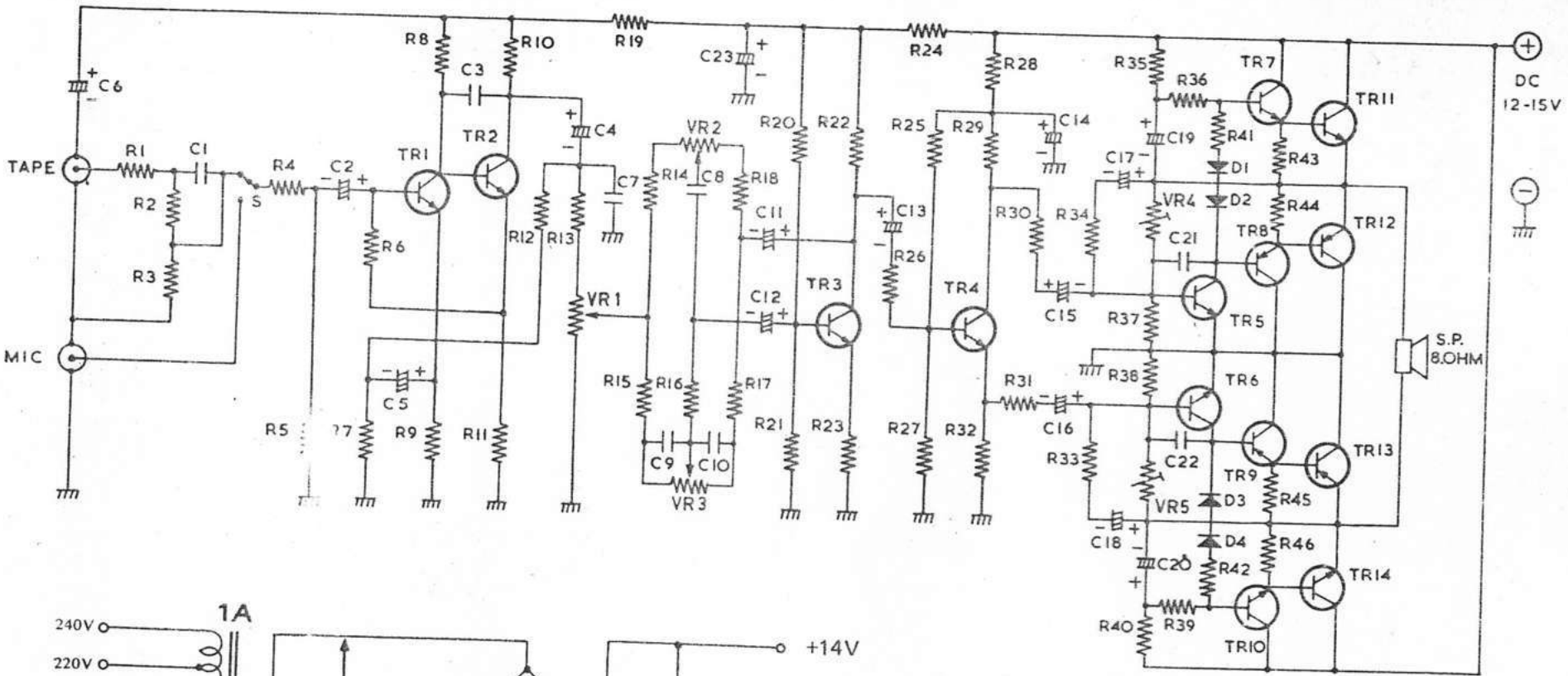

TL - 8

CIRCUIT DIAGRAM

TL - 10

PARTS LIST

R.1	390K
R.2	15K
R.3	1 M
R.4.6	470
R.5	5,6K
R.7	180K
R.8.21	10K
R.9.14.17.18.34	2,2K
R.10.11.12.33	4,7K
R.13.22	1K
R.15	470K
R.16	150K
R.19	100
R.20.26.30	47
R.23	1,8K
R.24	6,8K
R.25	180
R.27.28.31.32	1
R.29.35	10
NTC	220
VR.1	A 50K
VR.2.3	B 50K
VR.4	B 100K
C.1	500pF/25V
C.2	1 uF/10V
C.3	5KpF/25V
C.4.13.19	100uF/10V
C.5	150KpF/50V
C.6.10.11.12	10uF/10V
C.7	10KpF/25V
C.8.9.20	50KpF/25V
C.14.15	100KpF/25V
C.16.22.23	100uF/25V
C.17	47uF/25V
C.18	220pF/25V
C.21	2200uF/25V
TR.1.2.3	FCS 9015
TR.4.5	FCS 9012
TR.6	FCS 9013
TR.7.8	2SB 407/337

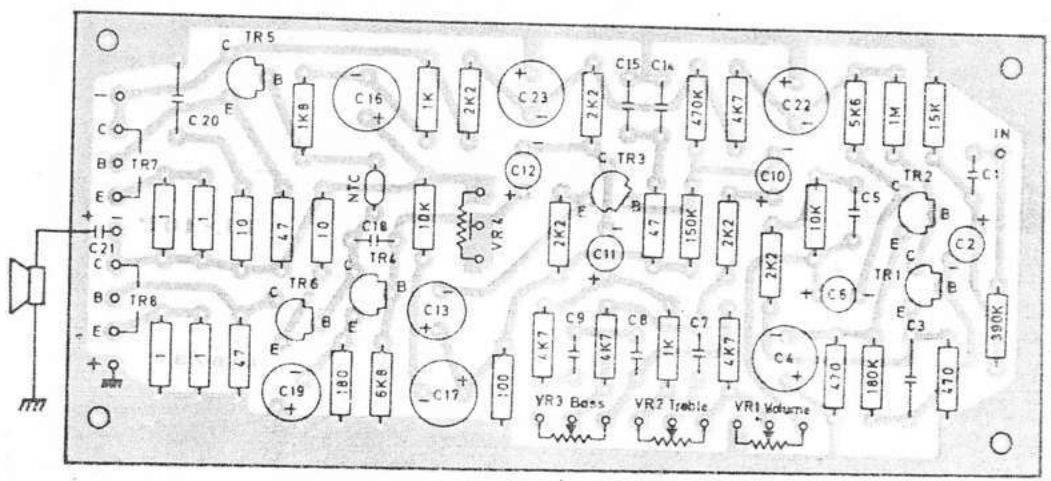

10 WATT OTL HI-FI AMPLIFIER

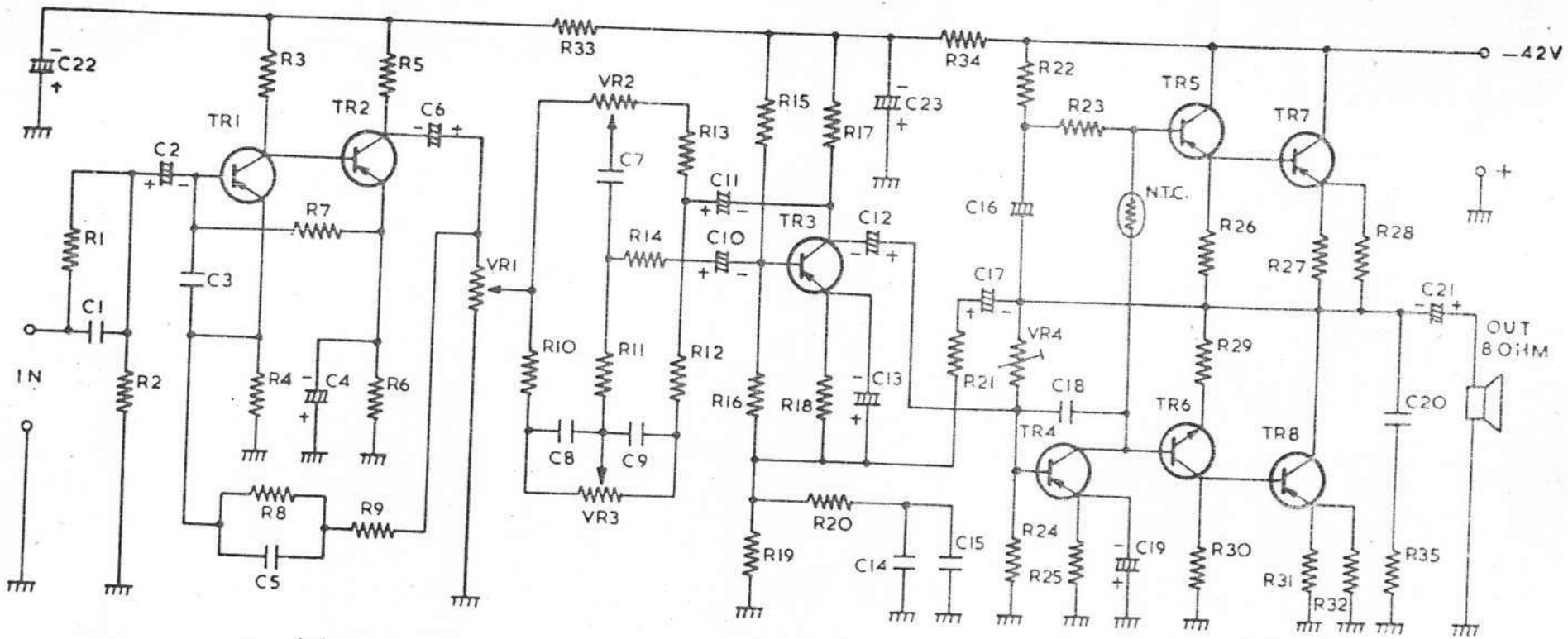

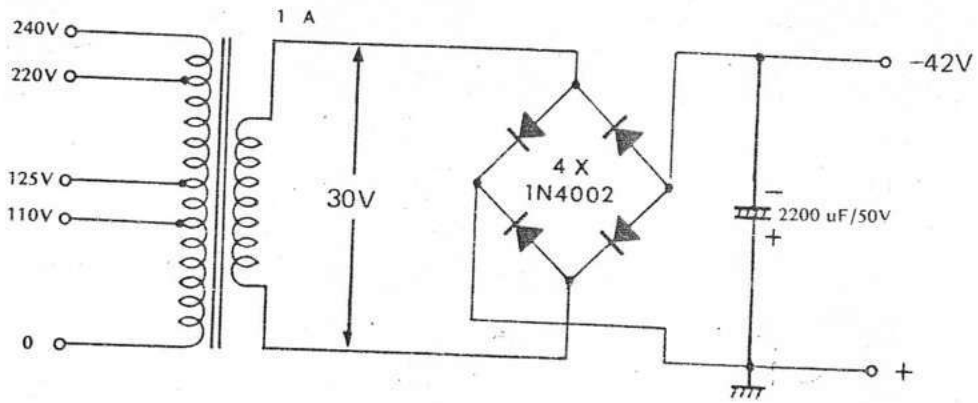

TL - 10

CIRCUIT DIAGRAM

TL - 15

PARTS LIST

R.1	82K
R.2	390K
R.3	18K
R.4	1 M
R.5.14.16	2,7K
R.6	220
R.7.11.21	470K
R.8	560
R.9	470
R.10.20.23.24.43	2,2K
R.12.13	39K
R.15.27.28	10K
R.17.18.19	4,7K
R.22	150K
R.25	82
R.26	8,2K
R.29	27K
R.30	1.8K
R.31	3,3K
R.32	6,8K
R.33.36.42	10
R.34	180
R.35.37	100
R.38.39.40.41	1
VR.1	A 10K
VR.2.3	B 100K
VR.4	B 100K
C.14	500pF/50V
C.2.6.11.25	0,1uF/25V
C.3.10.15.16	10uF/10V
C.5	20KpF/25V
C.7.17.24	220uF/10V
C.8.18.19.20	100uF/25V
C.9	33pF/50V
C.12	5KpF/25V
C.13.14	50KpF/25V
C.21	47uF/25V
C.22	10uF/25V
C.23	220pF/25V
C.26	2200uF/25V
TR.1.2.3	FCS 9015
TR.4.5.6	FCS 9012
TR.7	FCS 9013
TR.8.9	2SB 407/337
D.1.2	CDG 24

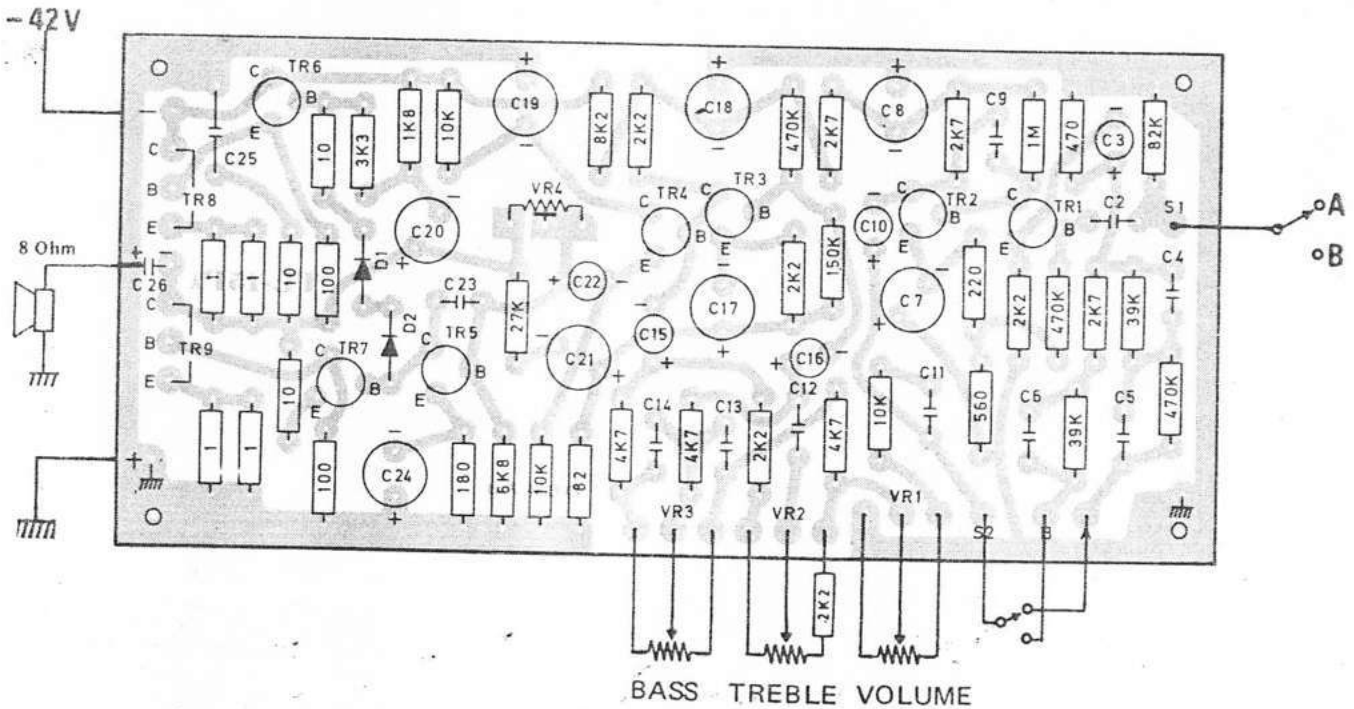

15 WATT OTL HI-FI AMPLIFIER

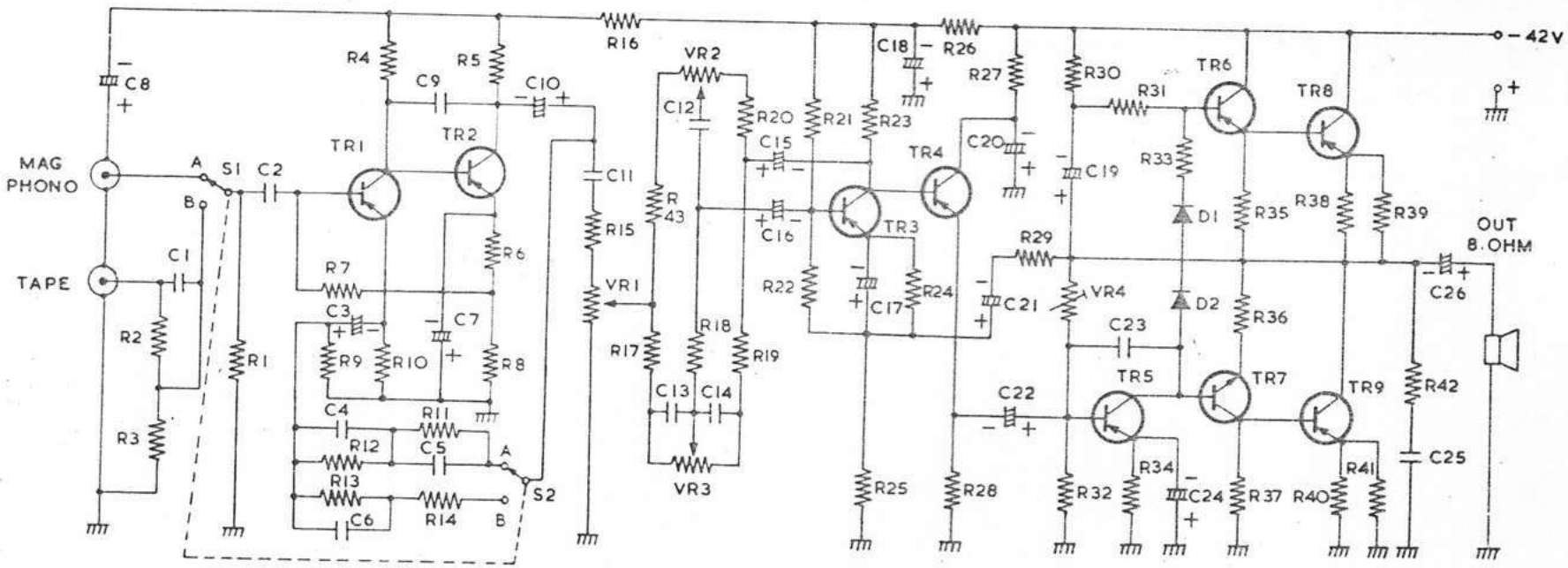

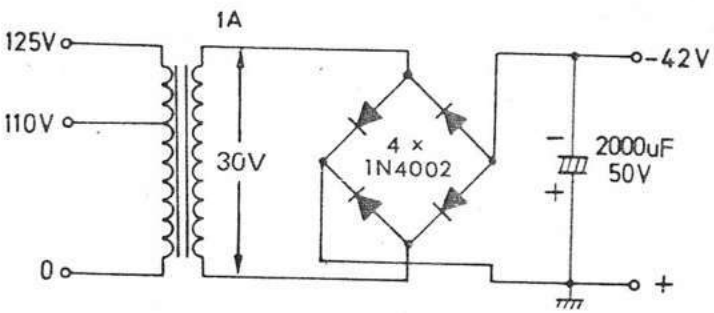

TL - 15

CIRCUIT DIAGRAM

TL - 18

PARTS LIST

R.1	330K
R.2	47K
R.3.21	10K
R.4	68K
R.5.6	470K
R.7.30	2,2K
R.8.11.19.20	6,8K
R.9.36.38	220
R.10	560
R.12	5,6K
R.13	82K
R.14.27.32	33K
R.15.33	470
R.16.18.26	4,7K
R.17	1,8K
R.22	1,5K
R.23	1 M
R.24.28.29	3,3K
R.25	180
R.31	680
R.34	15K
R.35.37	100
R.39	820
R.40.42	150
R.41	22
R.43.44.45.46	1
R.47	10
VR.1	A 50K
VR.2.3	B100K
C.1.22	220pF/50V
C.2.8.10.17.23	0,1uF/25V
C.3.9	33uF/10V
C.4	33pF/50V
C.5	220uF/10V
C.6	1 KpF/25V
C.7	20KpF/25 V
C.11	5 KpF/25V
C.12.13.19.20	50KpF/25V
C.14.15	10uF/10V
C.16.18	100uF/25V
C.21	47uF/25V
TR.1.2.4.5.	FCS 9015
TR.3.6.9.8	FCS 9012
TR.7.10	FCS 9013
TR 11.12	2SB 512
D.1.2.3.4	CDG 24

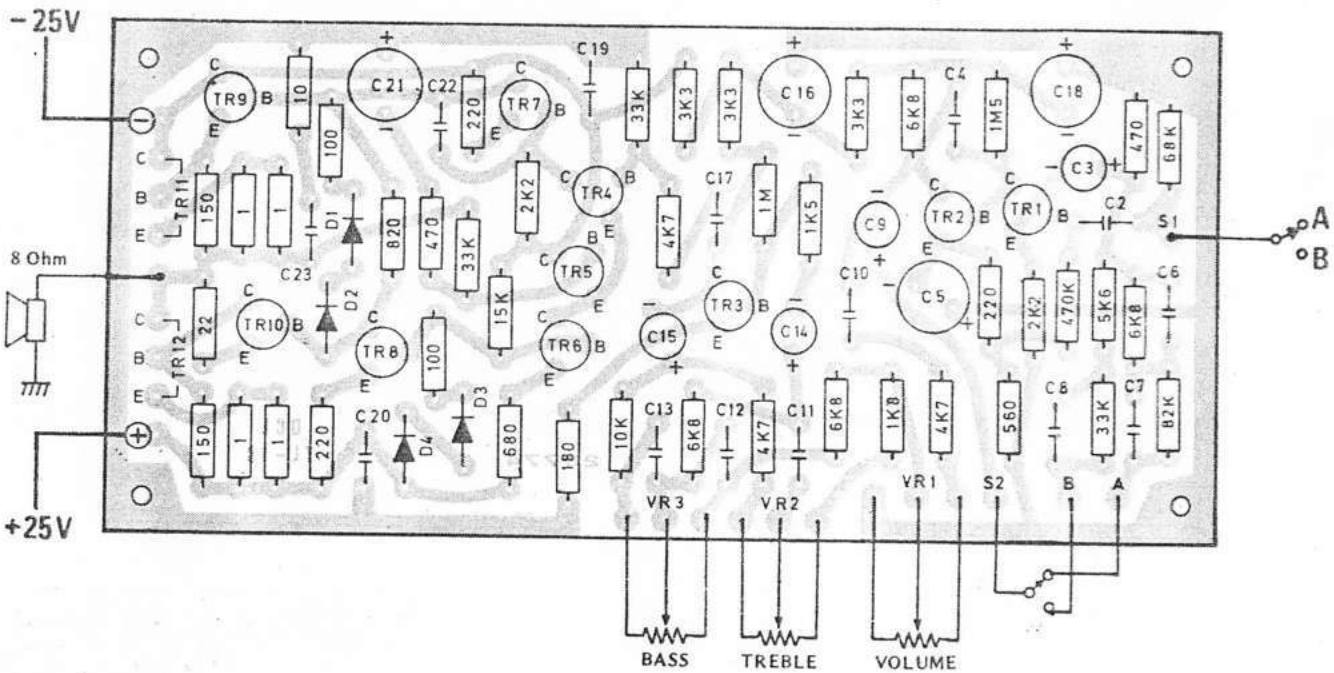

20 WATT OCL HI-FI AMPLIFIER

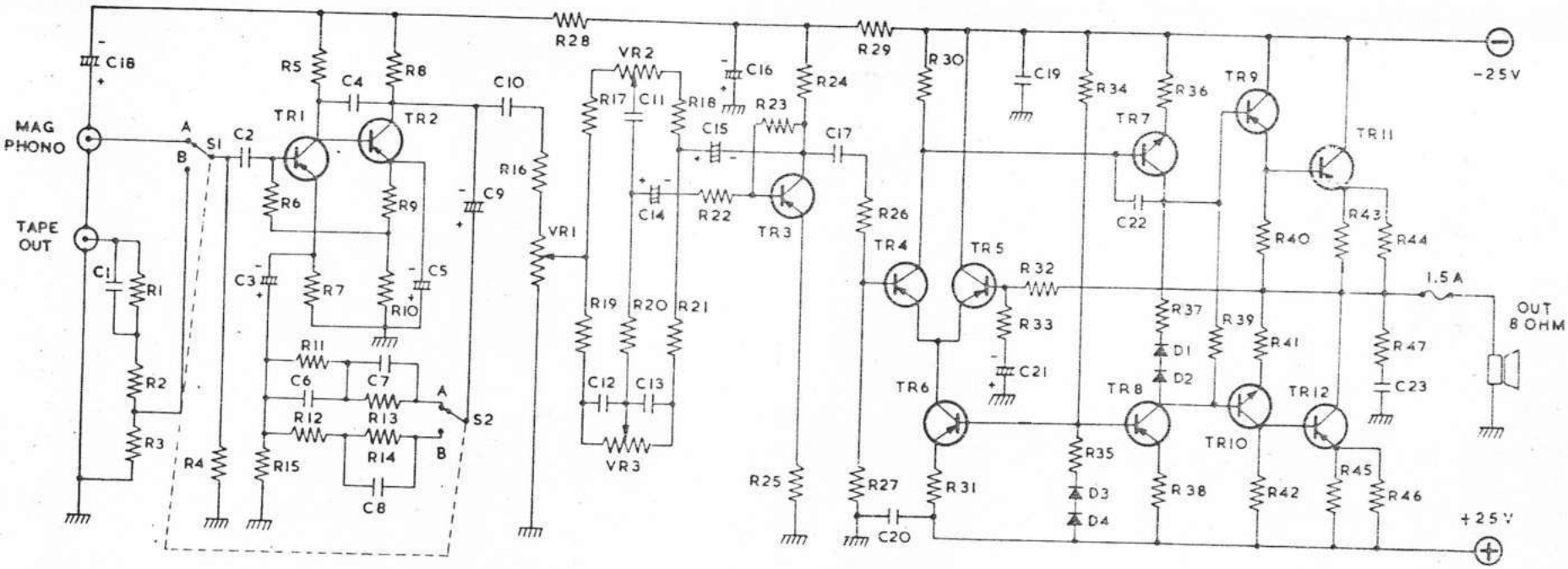

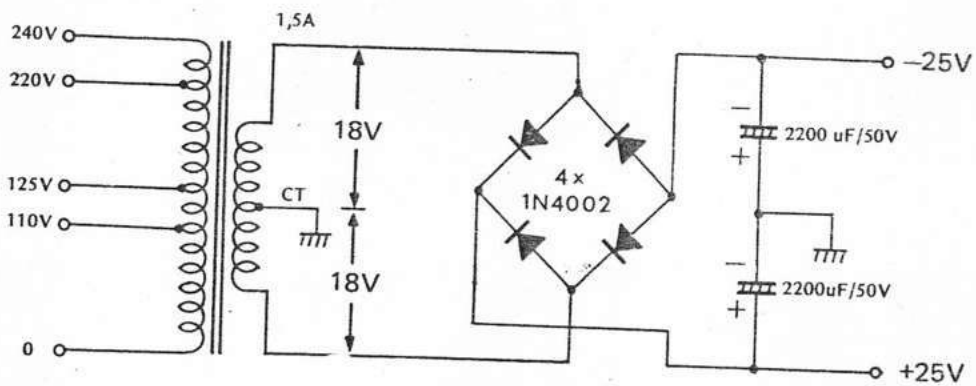

TL - 18

CIRCUIT DIAGRAM

TL - 25

PARTS LIST

R.1	68K
R.2.7	470K
R.3.26.27.29	15K
R.4.11	1 M
R.5.31	2,7K
R.6	220
R.8	560
R.9	470
R.10.20.24.43.2	2,2K
R.12	22K
R.13	33K
R.14	3,3K
R.15.16	8,2K
R.17.18.19	4,7K
R.21	820K
R.22	150K
R.23	1,8K
R.25	82
R.28	12K
R.30	1,2K
R.32	10K
R.33	22
R.34	390
R.35.37	120
R.36.42	10
R.38.39.40.41	1
VR.1	A 50K
VR.2.3	B 50K
VR.4	B 200K
C.14	500pF/50V
C.2.6.11.25	0,1uF/25V
C.3.10.15.16	10uF/16V
C.5	10KpF/25V
C.7.17.24	220uF/10V
C.8.20	100uF/25V
C.9	33pF/50V
C.12	5KpF/25V
C.13.14	50KpF/25V
C.18.19	100uF/35V
C.21	47uF/25V
C.22	10uF/25V
C.23	220pF/25V
C.26	2200uF/25V
TR.1 2	BC 109C
TR.3	BC 107B
TR.4.5.6	FCS 9013
TR.7	FCS 9012
TR.8.9	2N 3055
Diode 2X	CDG 24

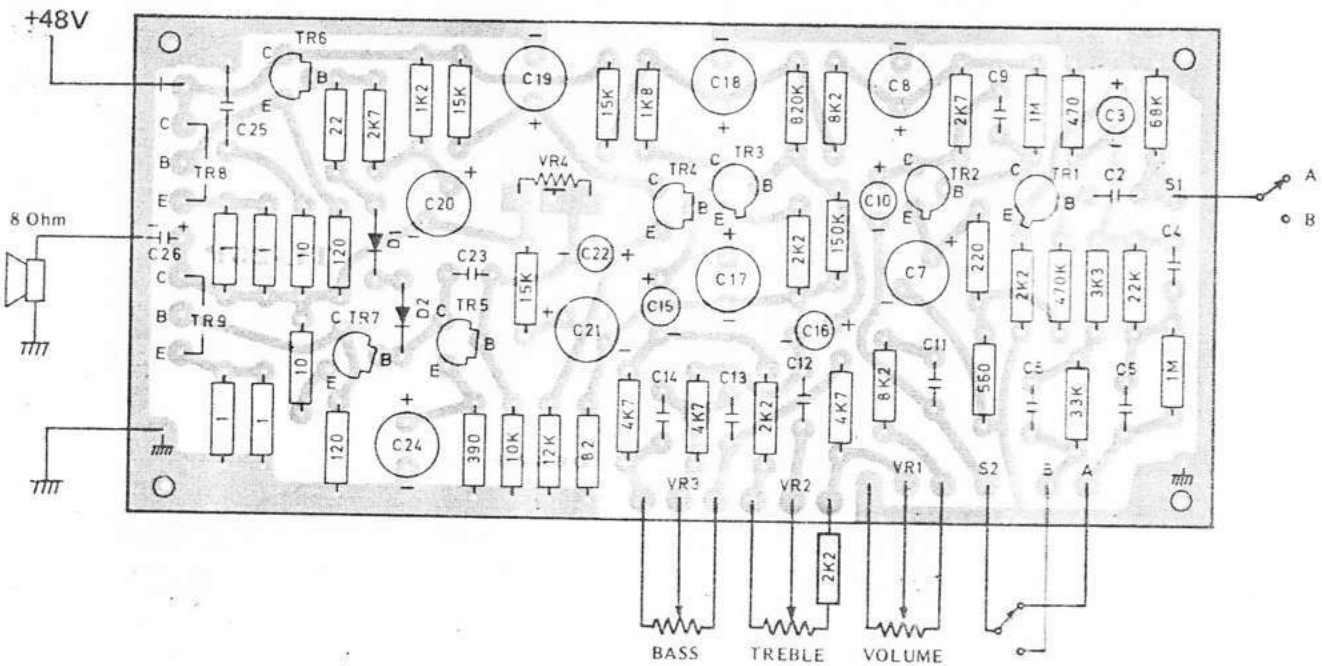

25 WATT OTL HI-FI AMPLIFIER

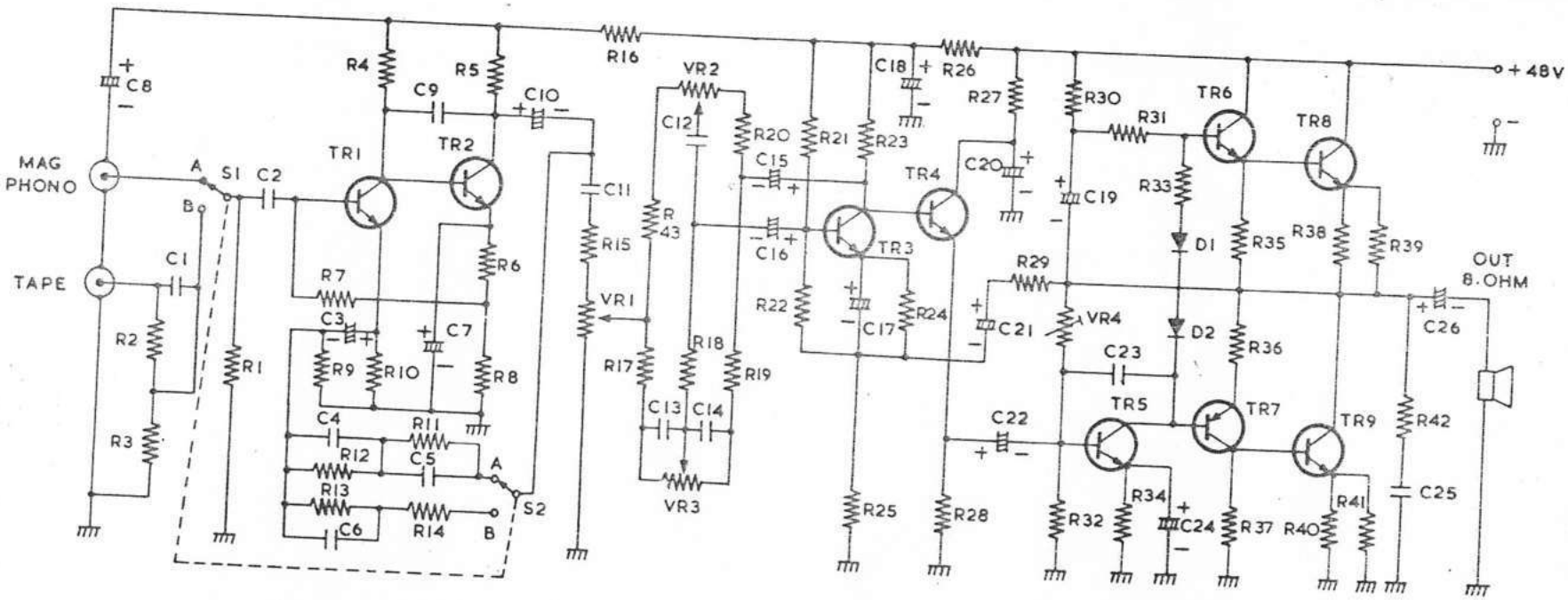

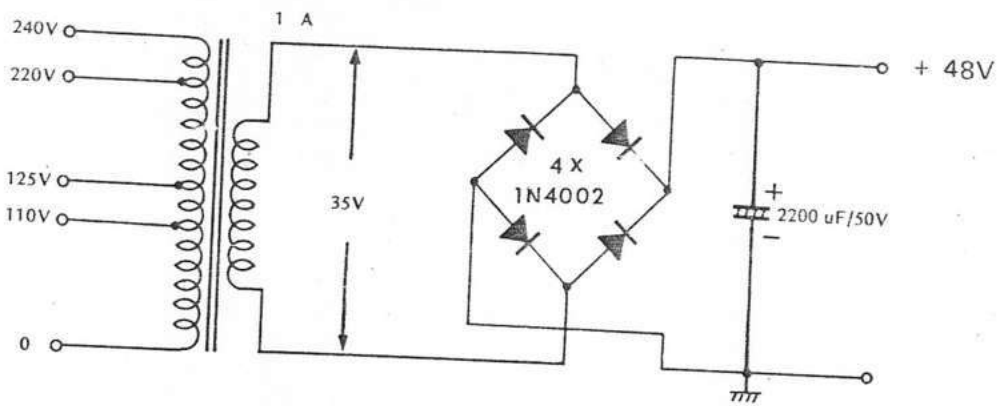

TL - 25

CIRCUIT DIAGRAM

TL - 45

PARTS LIST

R1.13	220K
R2	8.2K
R3	68K
R4	1,5M
R5	470K
R6	470
R7.33	2,2K
R8.43.45	220
R9.35	560
R10	10K
R11.21	1,5K
R12.18.19	6,8K
R14.17	1,8K
R15.32.36	33K
R16.22.31	4,7K
R20	12K
R23	2,2M
R24	5,6K
R25	150K
R26	180

R27.29	3,3K
R28	1K
R30	22K
R34	680
R37	15K
R38.40	100
R39.41	270
R42	820
R44.50	10
R46.47.48.49	1

VR1	22K
VR2	A 50K
VR3.4	B 100K

C1.22	220pf50V
C2.6.9.18	0,1uf25V

C3	33pf50V
C4	33uf10V
C5	220uf10V
C7	1kpf25V
C8	20kpf25V
C10.14.15	50kpf25V
C11.12	100uf25V
C13	5kpf25V
C16.17	10uf10V
C19.20.23	50kpf50V
C21	47uf25V

TR1.2.3.4	BC 109
TR5.6.7	BC 107
TR.8.10.11	2N 3569
TR9.12	2N 4355
TR13.14	2N 3055
D1.2.3.4	CDG 24
ZD	18V

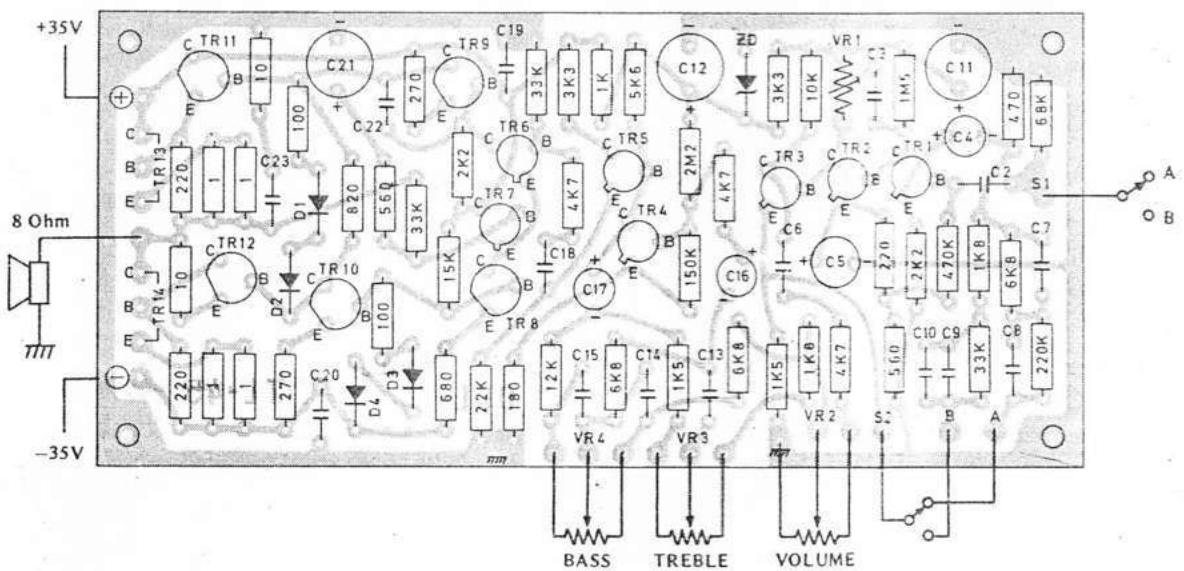

45 WATT OCL HI-FI AMPLIFIER

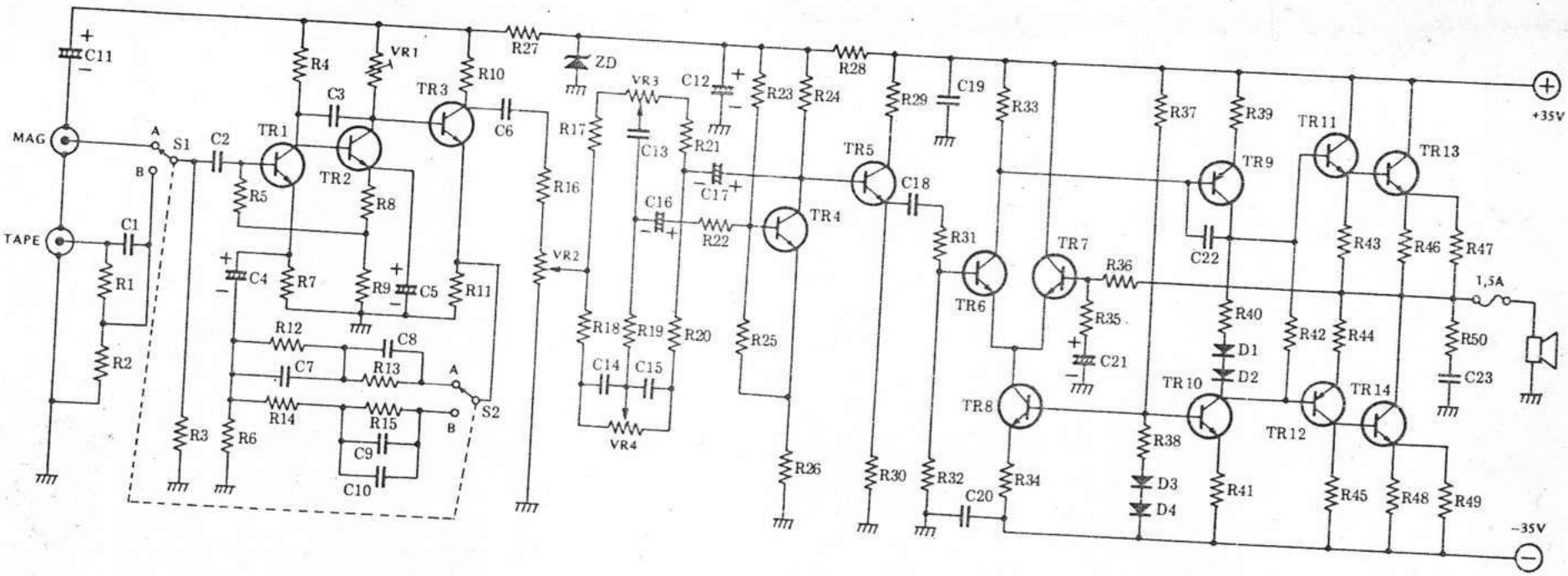

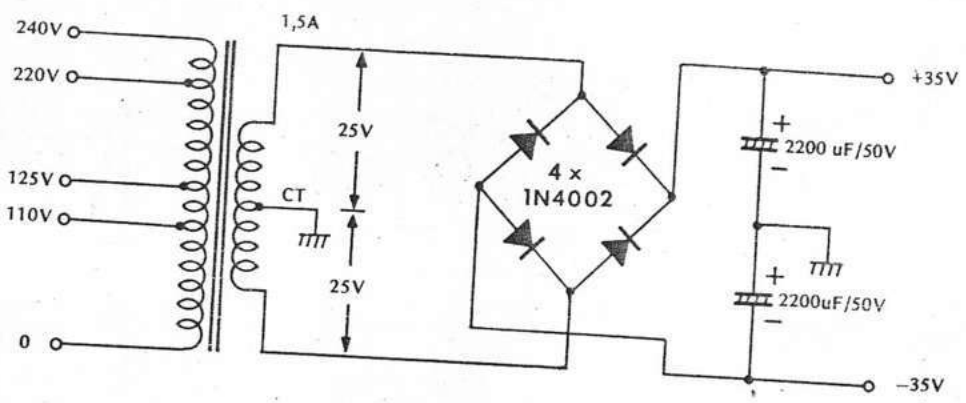

Rp 11.000,—

TL - 45

CIRCUIT DIAGRAM

TL - 70

PARTS LIST

R1.4.8.	470K
R2.16	12K
R3	100K
R5	8,2K
R6	68K
R7.33	1,5M
R9.13	2,2K
R10.49.50.58.59.	220
R11	560
R12	10K
R14.40	470
R15.27.39	1,8K
R17.35.37	33K
R18	6,8K
R19	270K
R20.60	4,7K
R21.24	18K
R22	1,2K
R23.26.31.36.38.61	3,3K
R25.48	1K
R28	2,2M
R29	150K
R30.43.46	180
R32.	22K
R34	3,9K
R41.42.44	39K
R45.47	330
R51.52.53.54.55.56	1
R57	10
VR1	30K
VR2	10K
VR3	A 50K
VR4.5	B 100K
C1.18	220 pf25V
C2.19	50 kpf50V
C3	33 pf25V
C4	220 uf10V
C5.7.11.12.16.20.21	100kpf25V
C6	33 uf10V
C8	500 pf25V
C9.10	10 kpf25V
C13.14.15	10 uf25V
C17	47 uf25V
C22.23	100 uf25V
TR1.2.3.4	SE 4010
TR5.7.8.	BC 107B
TR6	FCS9015
TR9	2N 3569
TR10.13	BC 161
TR11.12	BC 141
TR14	2N 3055
TR15	MJ 2955
D1.2.3.4	CDG 24
D5	Zener Diode 15V

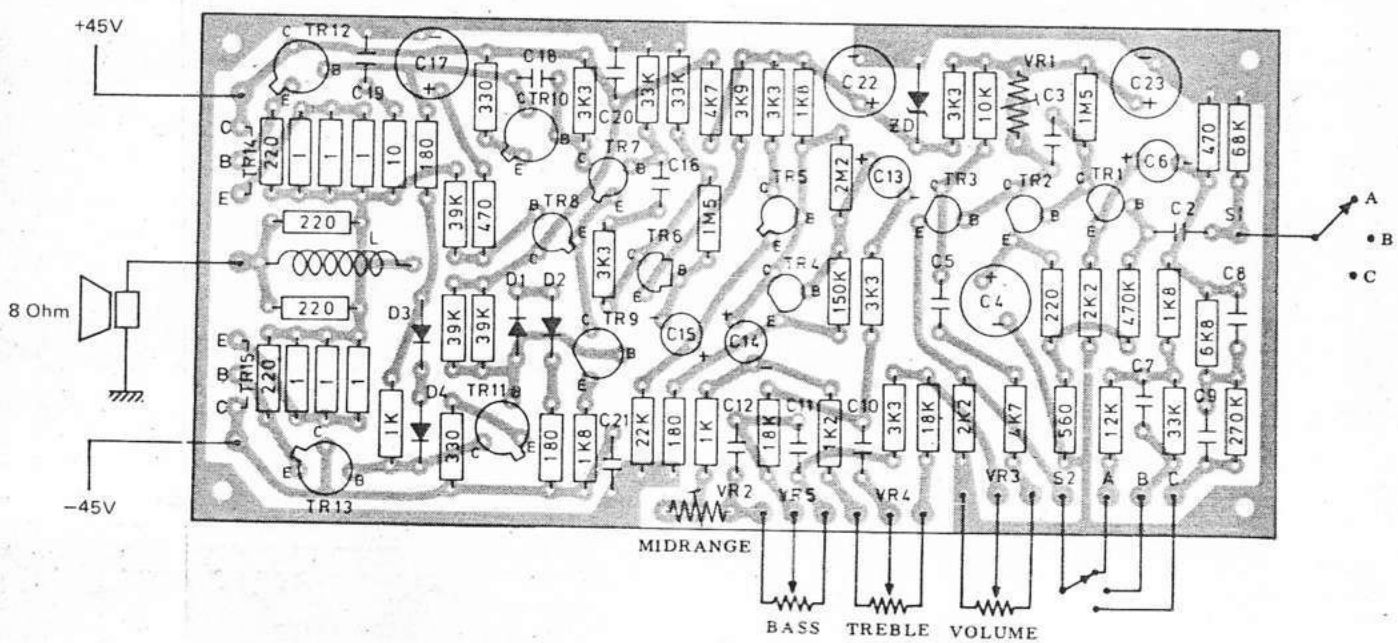

70 WATT OCL HI-FI AMPLIFIER

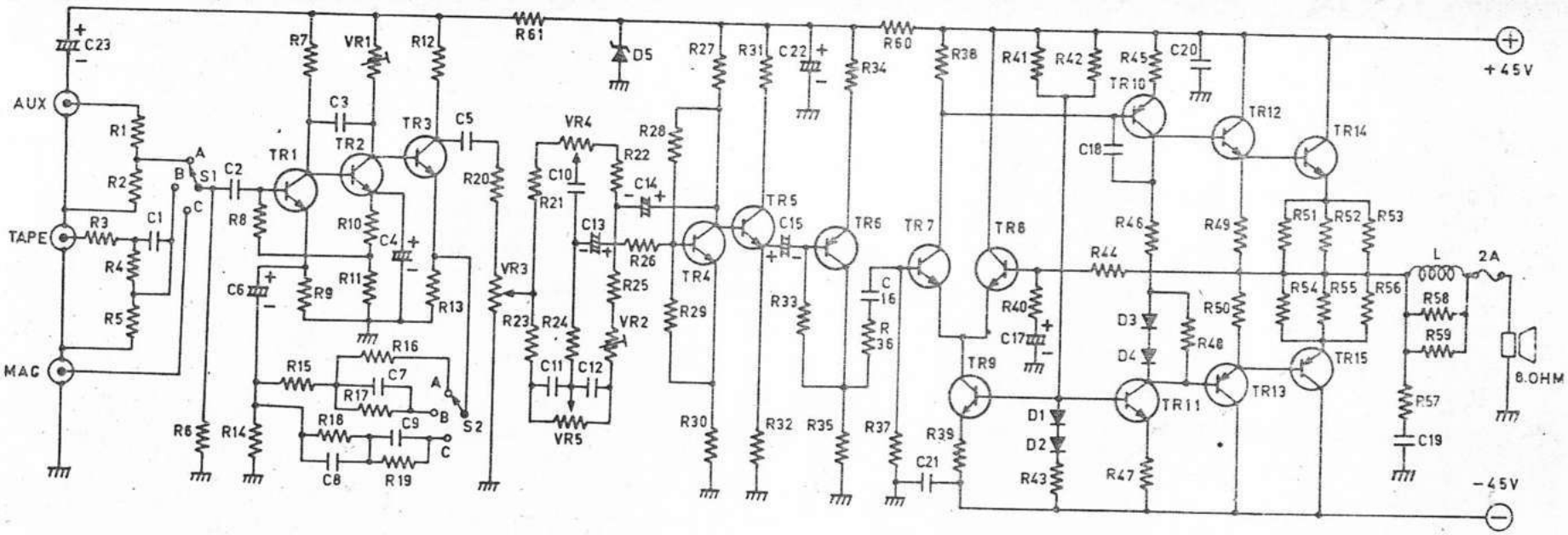

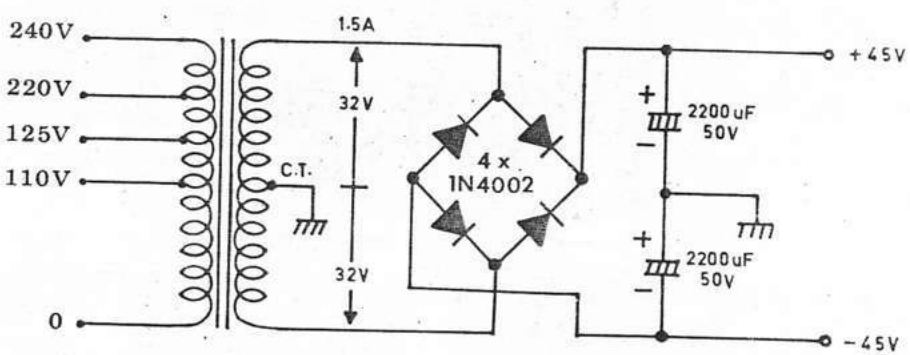

TL - 70

CIRCUIT DIAGRAM

TL - 101

PARTS LIST

R.1	100
R.2	10K
R.3.8.13	47
R.4.9.14	470
R.5.6.10.11.15.16	1
R.7	2K2
R.12	3K3
VR.1	5K
VR.2.3	10K
VR.4	2K2
C.1.2	1uF/10V
C.3.5	20KpF/50V
C.4	0.1uF/50V
TR1.3.5	FCS 9012
TR.2.4.6	C 1162
T.	P.: 200 Ohm S.: 5K Ohm

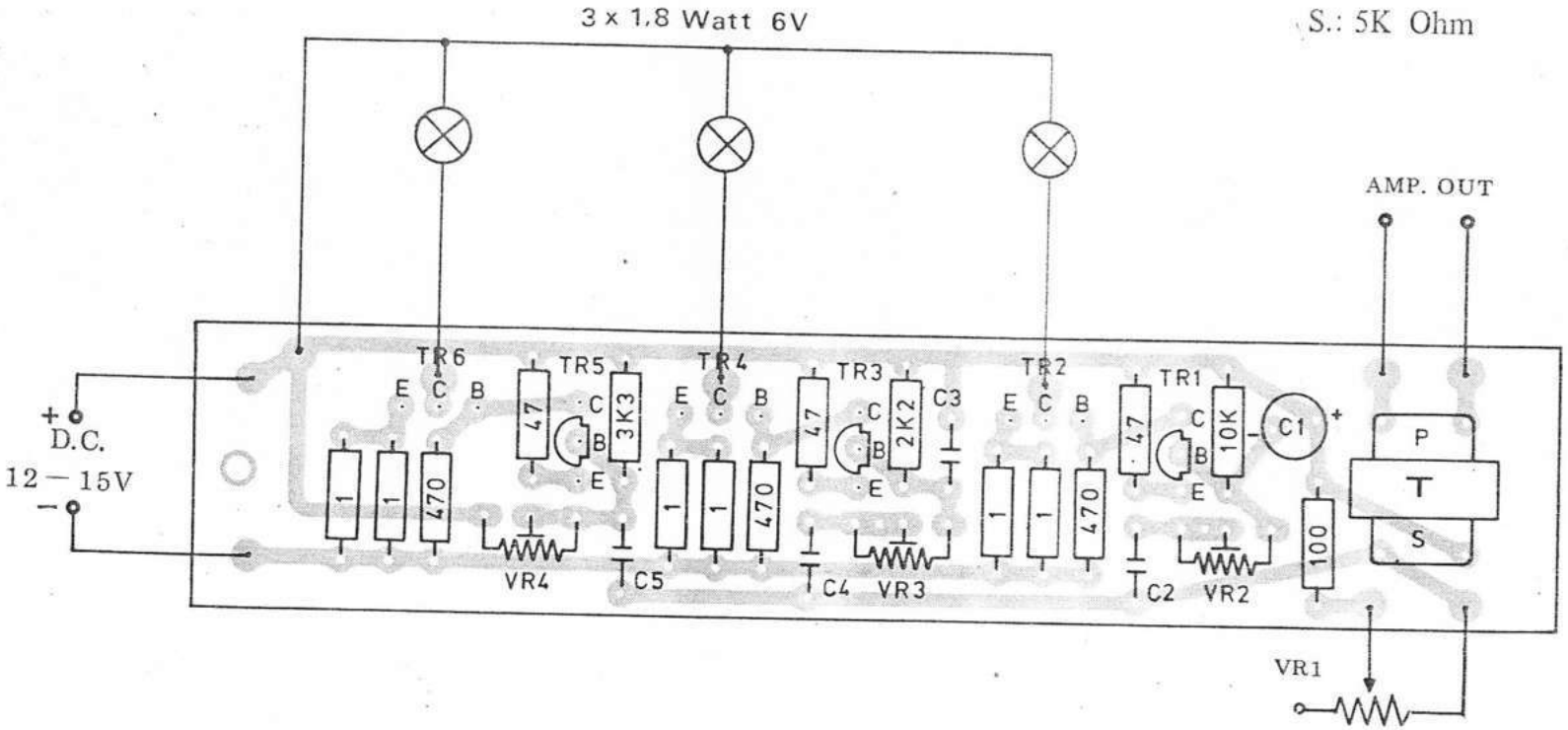

3 WAY DISCOTIC LAMP

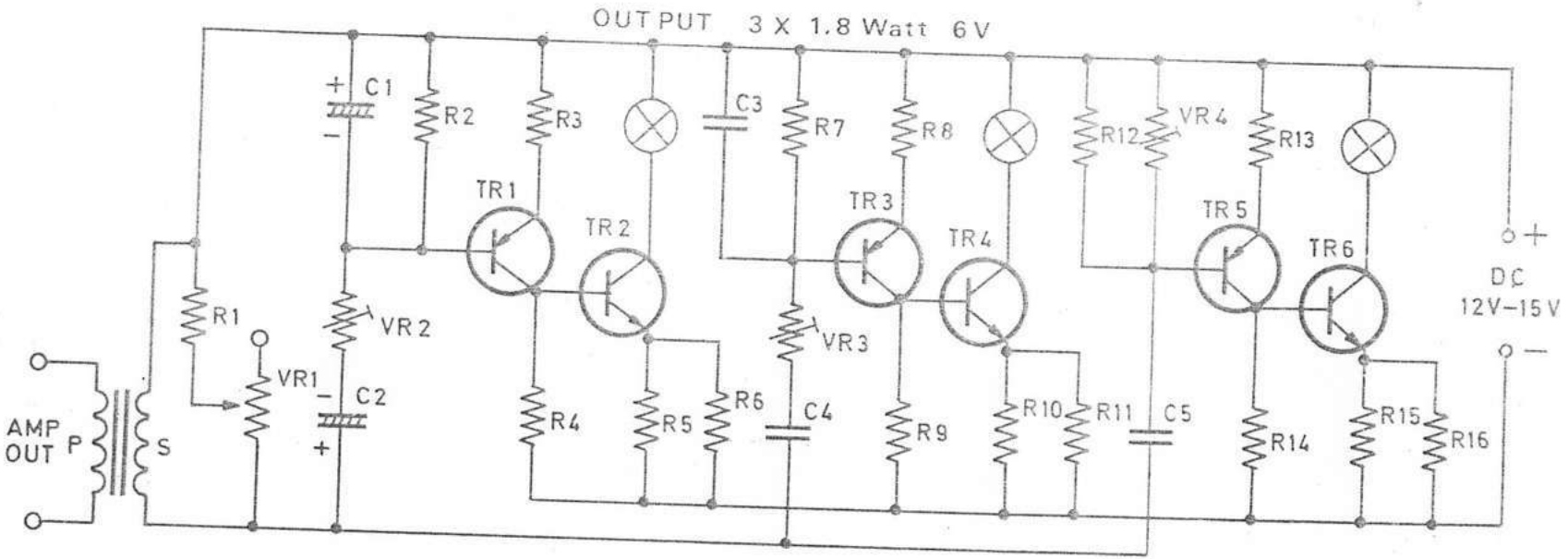

TL - 101

CIRCUIT DIAGRAM

TL - 102

PARTS LIST

R.1.3	100
R.2	1 K
R.4	2K2
VR.1	5K
VR.2	2K2
VR.3.4	10K
C.1	3.9KpF/50V
C.2	50KpF/50V
C.3	0.1uF/50V
C.4	1 uF/10V
TR.1.3.5	FCS 9013
TR.2.4.6	FCS 9012
T	P: 200ohm S: 5K ohm

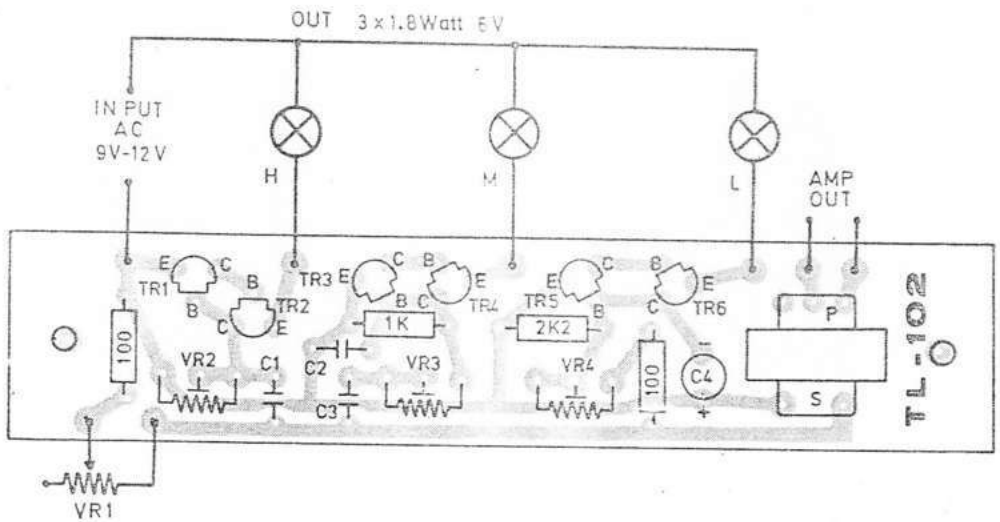

3 WAY DISCOTIC LAMP

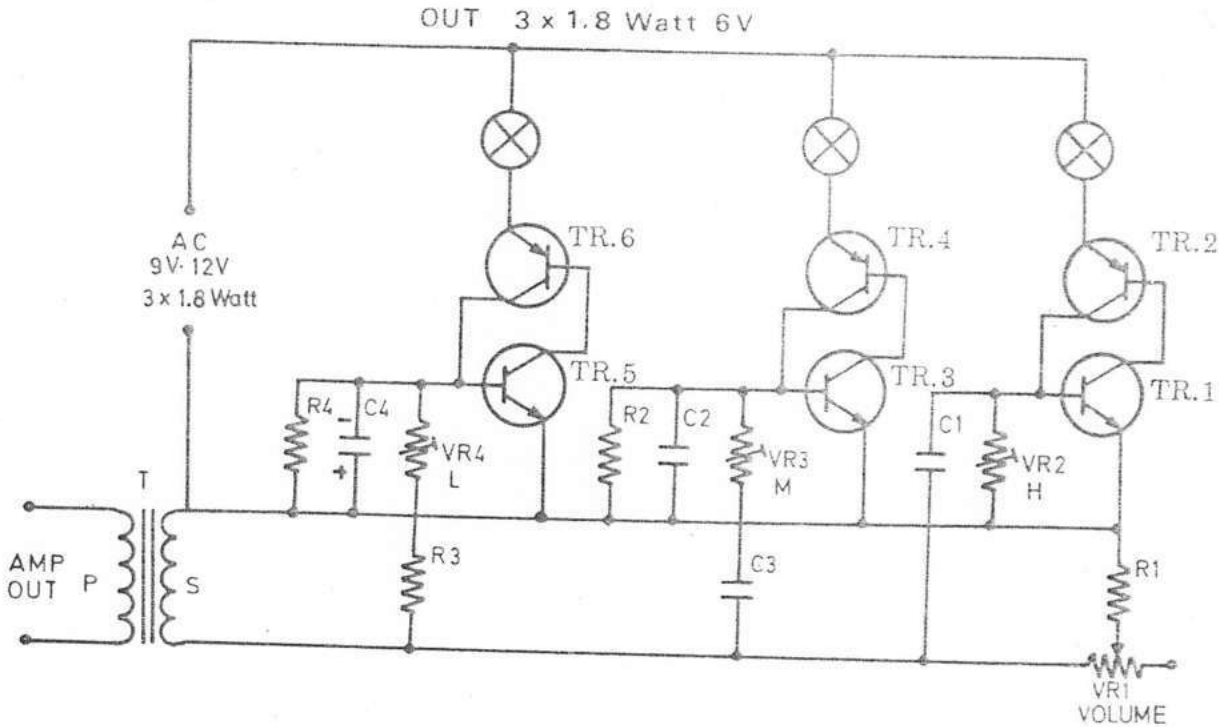

TL - 102

CIRCUIT DIAGRAM

TL - 103

PARTS LIST

R1	100
R2.3	1K
R4	1.2K
VR.1	2K
VR.2.3	10K
VR.4	5K
C.1	0,005uf25V
C.2.3	0,05uf50V
C.4	1uf10V
S.C.R	3x C10/FIR3D41
T.103	P.200ohm / S.5Kohm

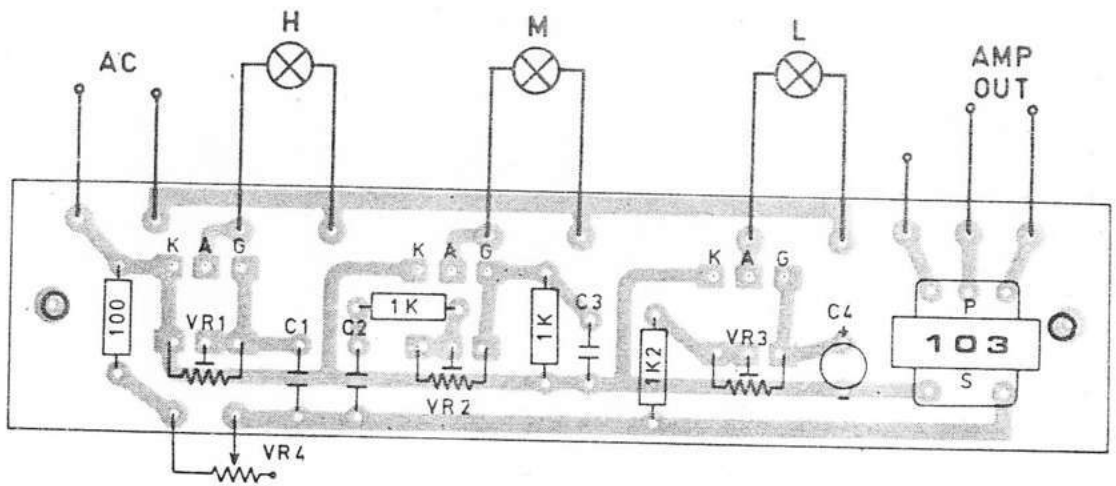

3 WAY DISCOTIC LAMP

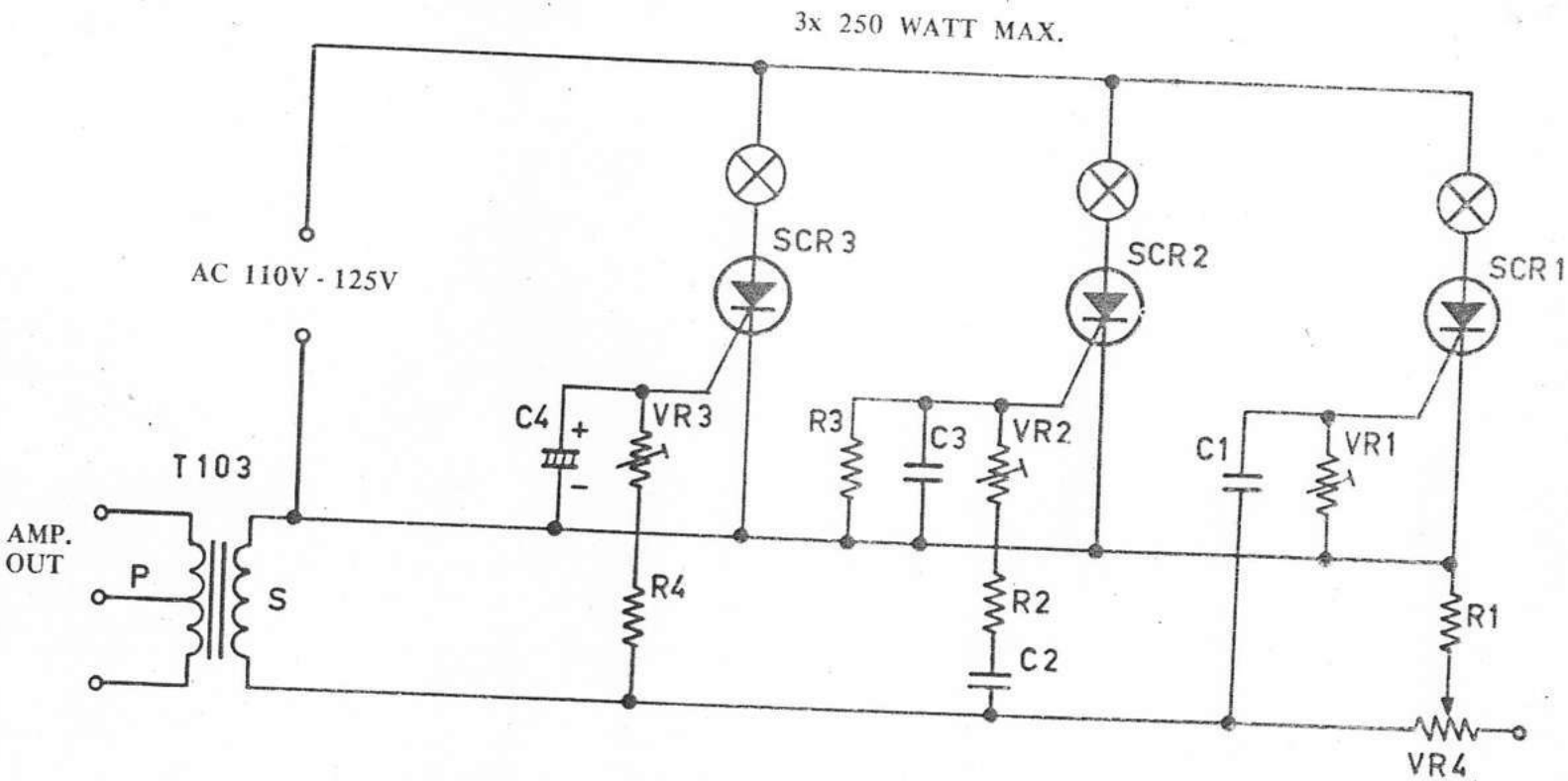

TL - 103

CIRCUIT DIAGRAM

TL - 103A

PARTS LIST

R.1	100
R.2.3.4	1 K
R.5	330
VR.1	2K
VR.2.3	10K
VR.4	5K

C.1	0.005uF/25V
C.2.3.5	0.05uF/50V
C.4	1uF/10V
SCR	3x T103
T	P: 200 ohm S: 5K ohm

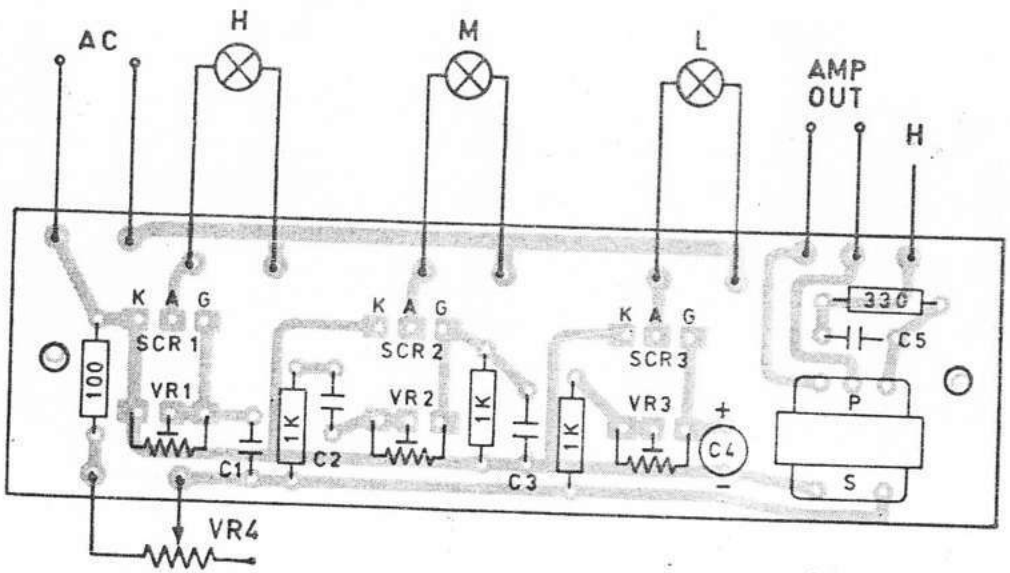

SEQUENTIAL TIMER CONTROL

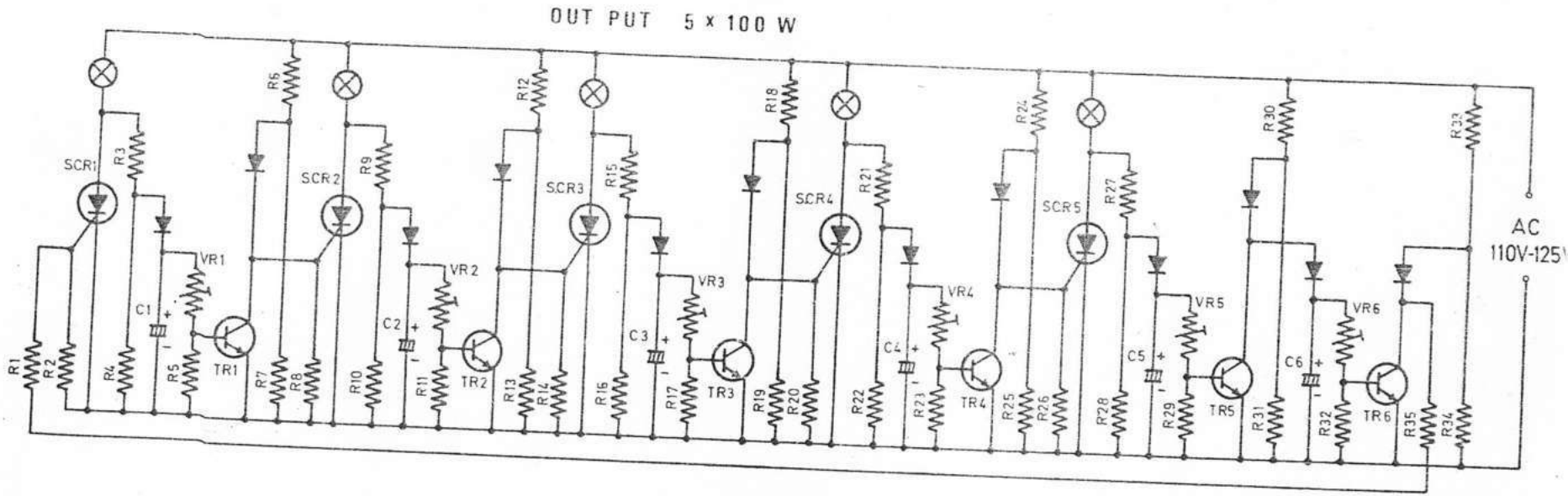

TL - 108

CIRCUIT DIAGRAM

TL - 109

PARTS LIST

R.1	220
R.2.5	10K
R.3	100K
R.4	1K5
R.6	470K
VR	10K
C.1	0.022uF
C.2.4	10uF/10V
C.3	0.1uF/100V
C.5	0.1uF/600V
C.6	47uF/450V
C.7	10uF/450V
T1.	P: 200 ohm S: 5K ohm
T2.	TRIGGER COIL
TR.	BC 141
SCR.	T 103
D.1.2.	BY 127
FT.	XENON FLASH TUBE

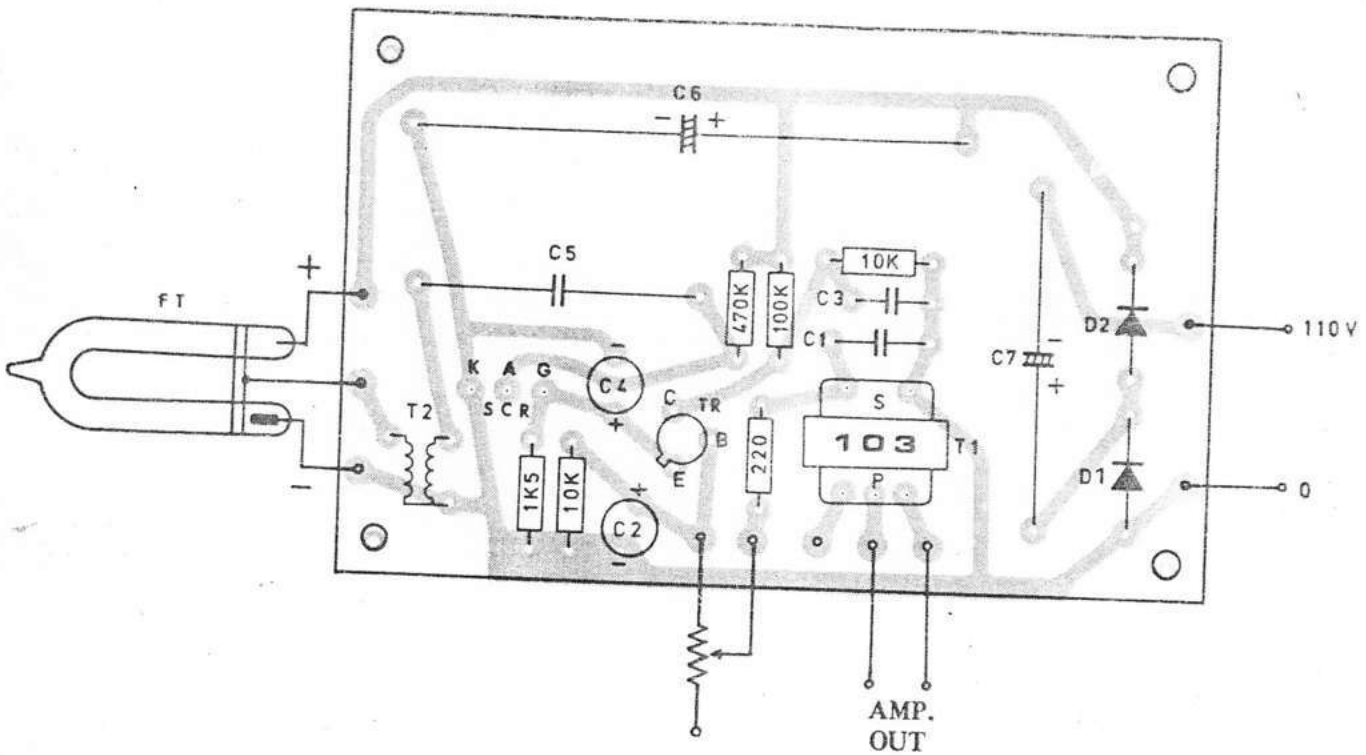

DISCOTIC LAMP

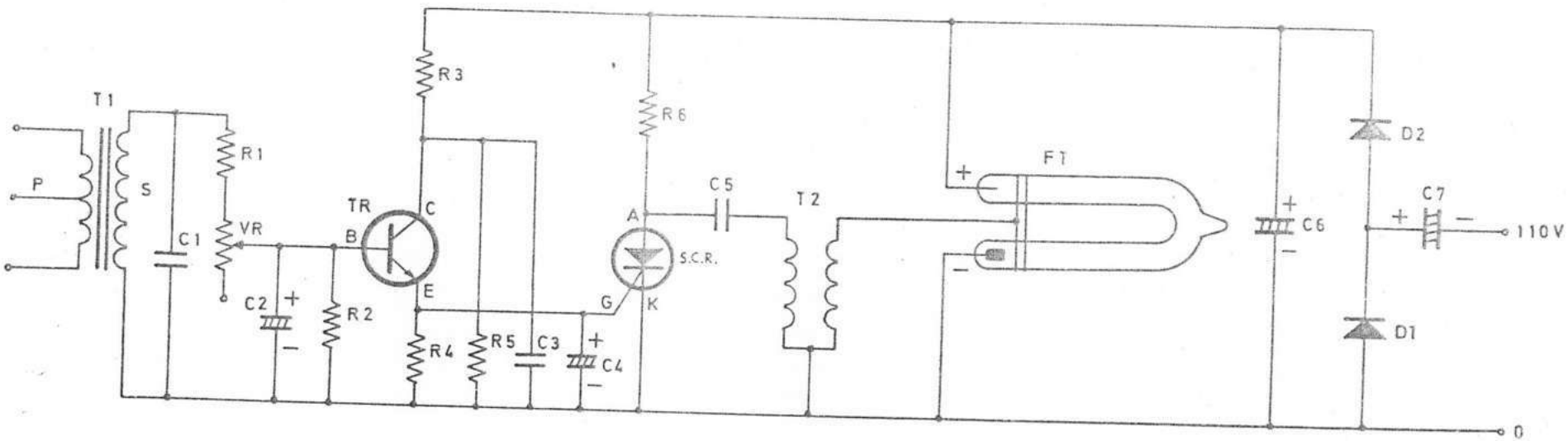

TL - 109

CIRCUIT DIAGRAM

TL - 110

PARTS LIST

R.1.4 ..... 100K
R.2 ..... 2M2
R.3 ..... 330K
R.5 470
V.R. ..... 1 M
C.1 ..... 10uF/450V
C.2 ..... 50uF/550V

C.3 ..... 0,1uF/100V
C.4 ..... 0,22uF/100V

D.1.2 ..... 1N 4007
T.R. 2N 2222A
S.C.R. ..... C 10
F.T. ..... FT 106
T. ..... TRIGGER COIL

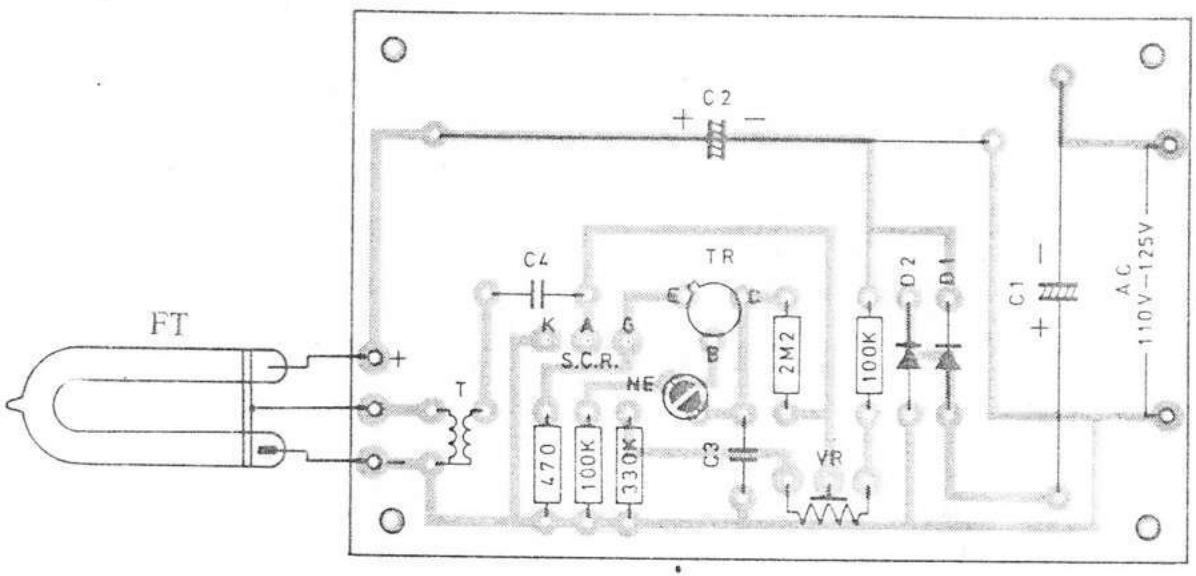

ELECTRONIC STROBO LIGHT

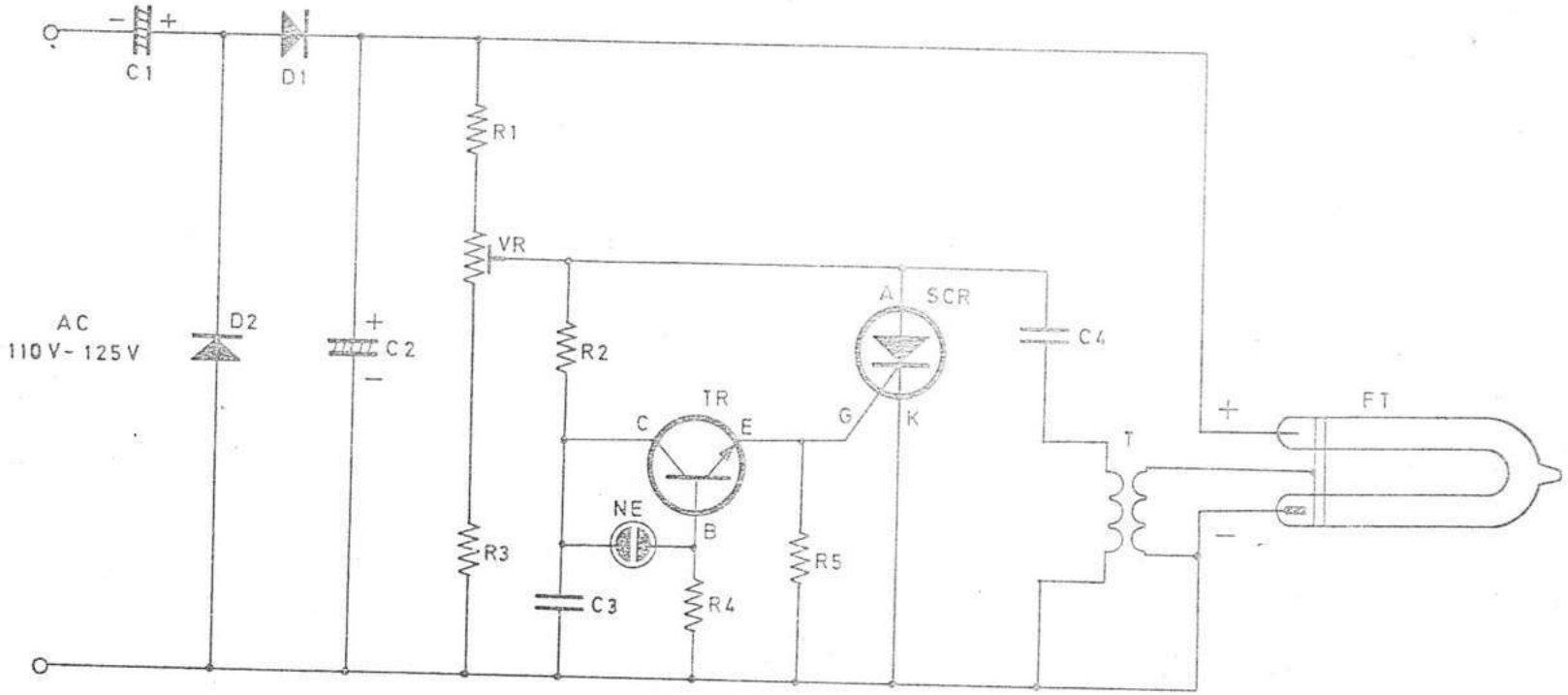

TL - 110

CIRCUIT DIAGRAM

TOUCH SWITCH
DOOR BELL TYPE

R.1	2M2
R.2	10K
R.3	1 K
R.4	2K2
R.5	22K
R.6	3K3
C.1	1 KpF/50V
C.2	47uF/25V
D.	1N 4002
S.C.R.	C10/FIR3D41
TR.1.2	FCS 9014

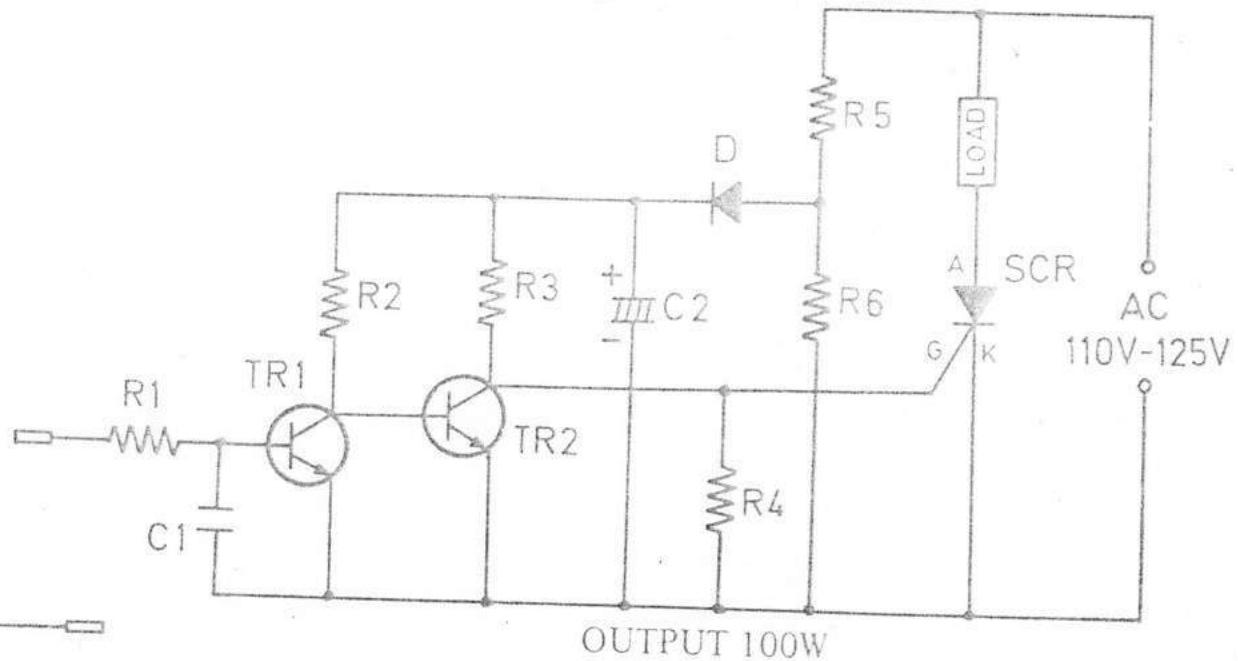

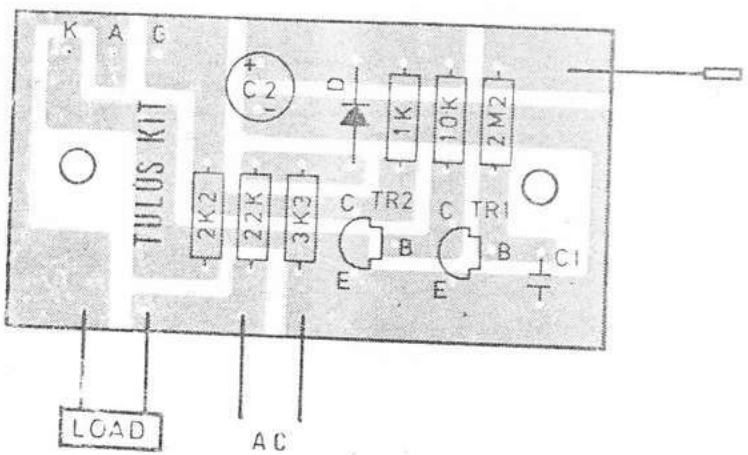

TL - 201

CIRCUIT DIAGRAM

LIGHT CONTROL SWITCH

PARTS LIST

R1.3	10K
R2	1 K
VR	100K
C	10uf10V
TR1	FCS 9014
TR2	FCS 9013
D	1N 4002
CdS –05	

PRINTED CIRCUIT BOARD

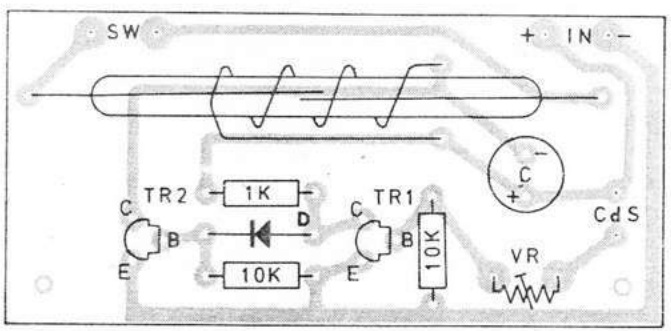

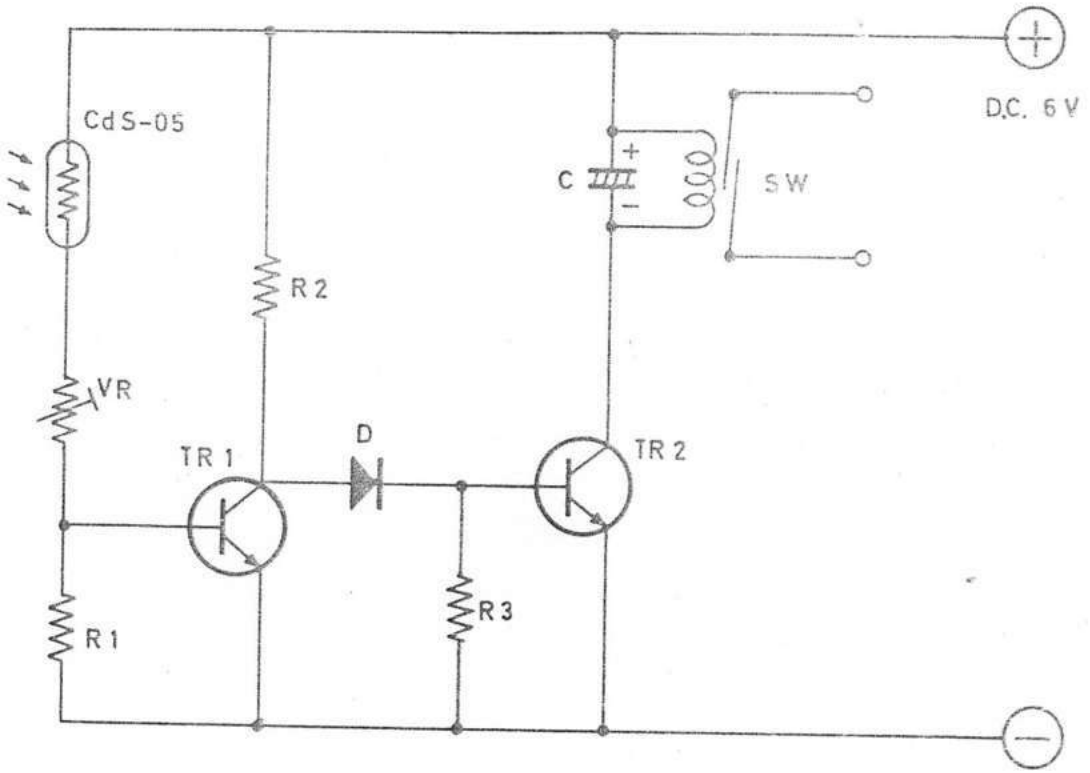

TL - 202

CIRCUIT DIAGRAM

LIGHT CONTROL SWITCH

PARTS LIST

R1	10K
R2	5.6K
R3	1 K
VR	100K
C	10uf10V
TR	FCS 9014
SCR	2N 5061
D	1N 4002
CdS - 05	

PRINTED CIRCUIT BOARD

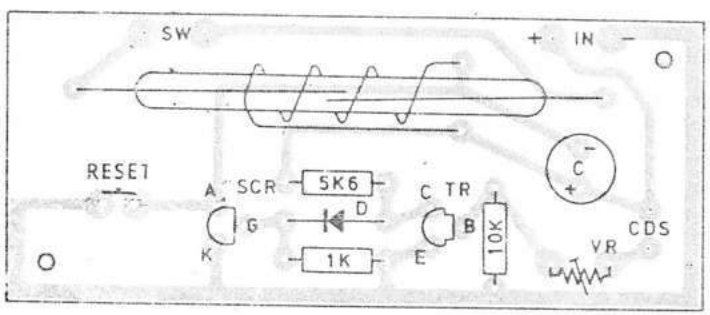

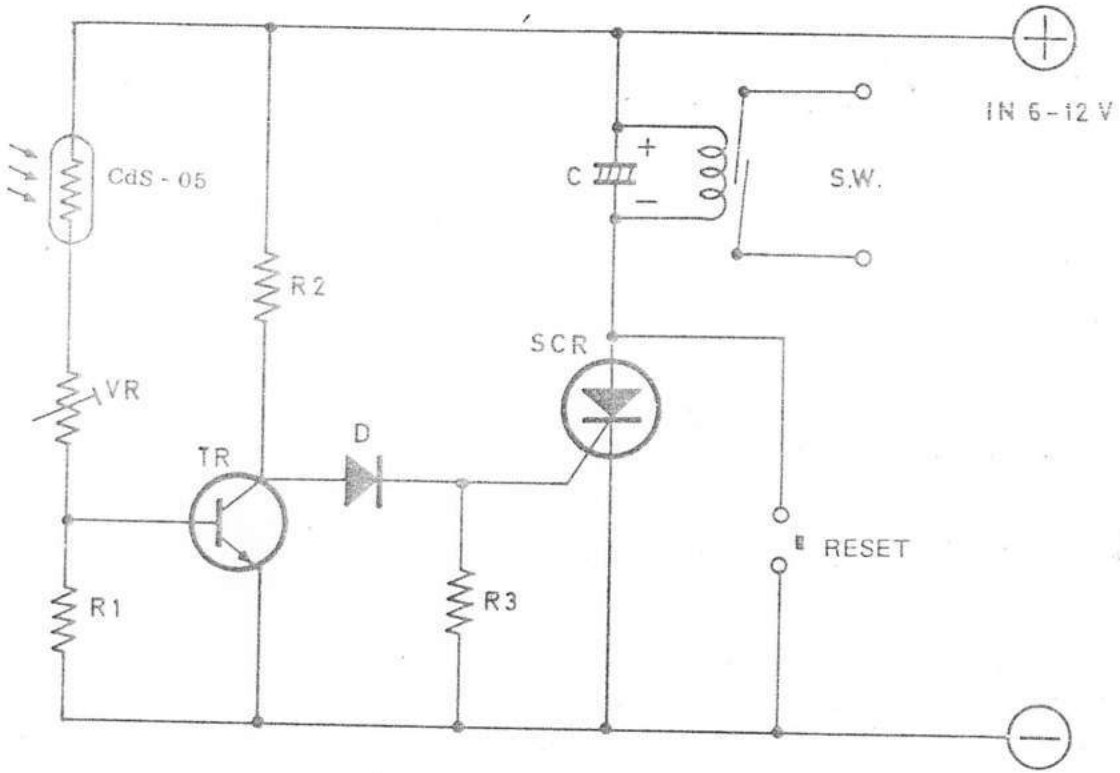

TL - 203

CIRCUIT DIAGRAM

LIGHT CONTROL SWITCH

PARTS LIST

R.1.2.3	10K
C.	0.1uF/25V
VR.	100K
TR.	FCS 9012
SPD.	MEL 11
PUT.	MEU 21
SW.	PUSH ON

PRINTED CIRCUIT BOARD

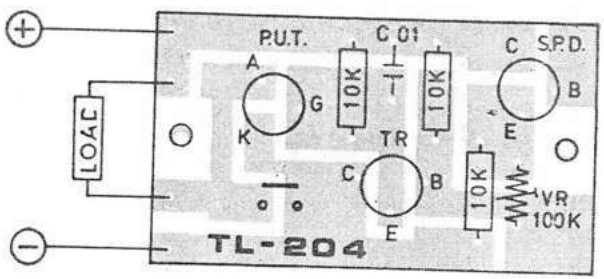

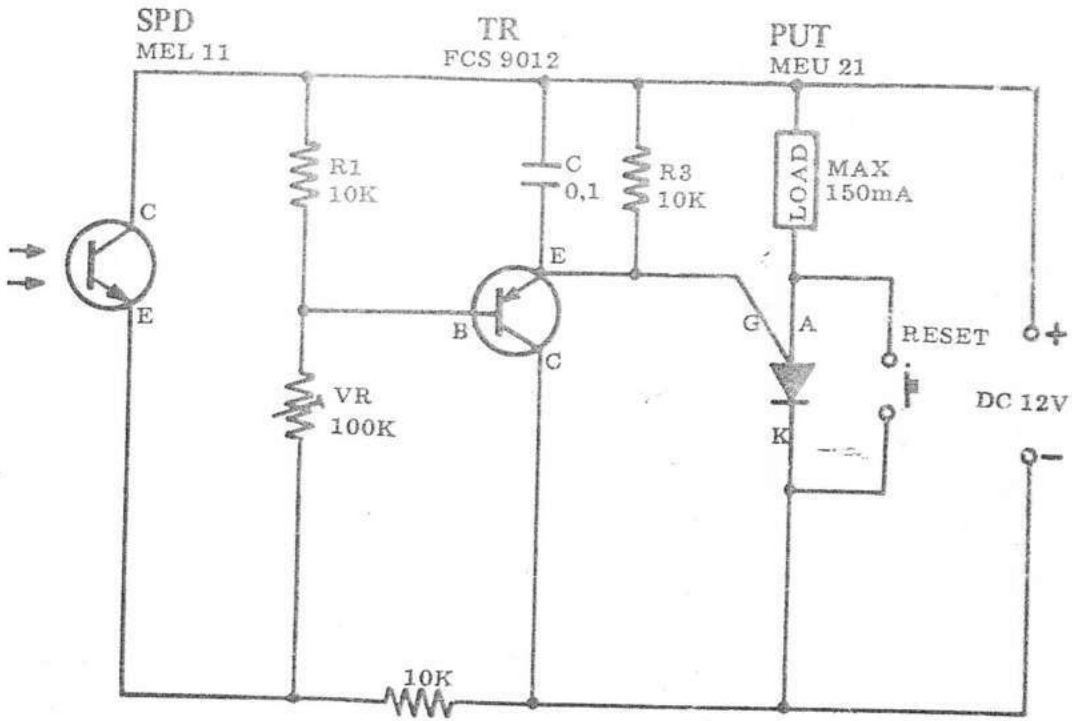

TL - 204

CIRCUIT DIAGRAM

TL - 205

PARTS LIST

R.1	560
R.2	22K
R.3	2K2
R.4	4K7
R.5	8K2
R.6	270
R.7	82K
R.8	18K
R.9	820
VR.1	100K
VR.2	47K
C.1.2	33uF/10V
C.3	0.1uF/25V
C.4	0.2uF/25V
TR.1	FCS 9013
TR.2	FCS 9012
TR.3	2N 3569
D.	1N 4002
Output Transformer	OT – 240

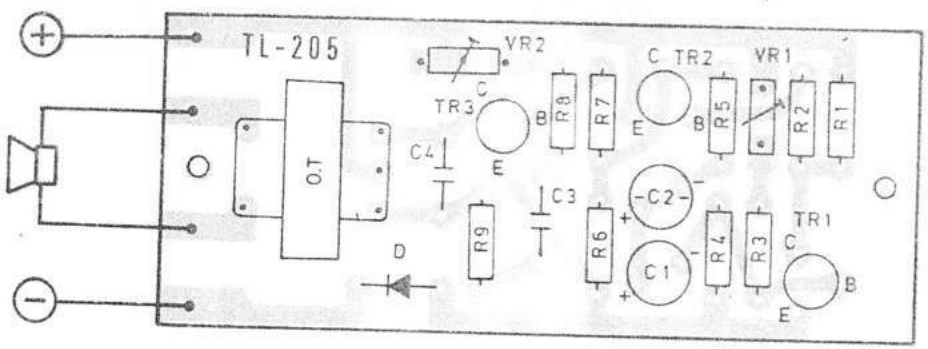

ELECTRONIC ALARM

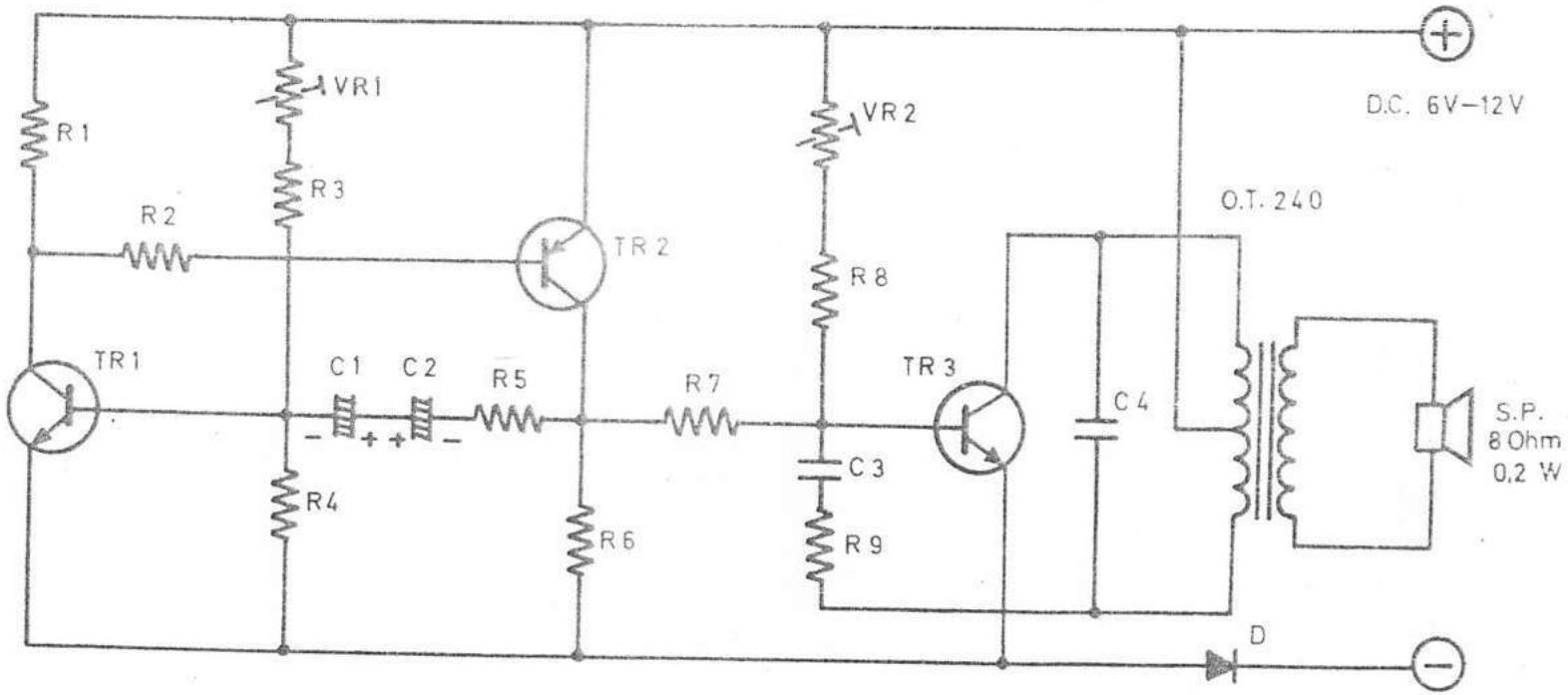

TL - 205

CIRCUIT DIAGRAM

TL·205A

PARTS LIST

R.1	560
R.2	330
R.3.8.	22K
R.4	33K
R.5	3K9
R.6	270
R.7	82K

VR.1.2	100K
VR.3	10K
C.1.2	33uF/10V
C.3	0,033uF/10V
TR.1.3	FCS 9013
TR.2.4	FCS 9012

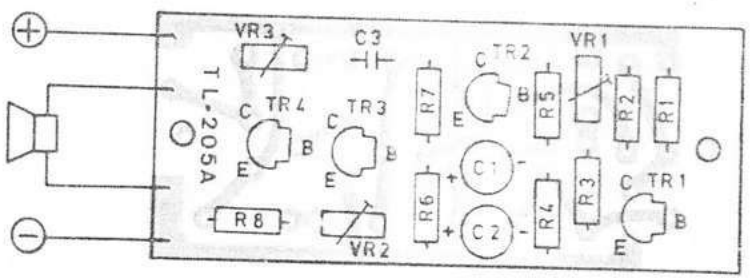

ELECTRONIC ALARM

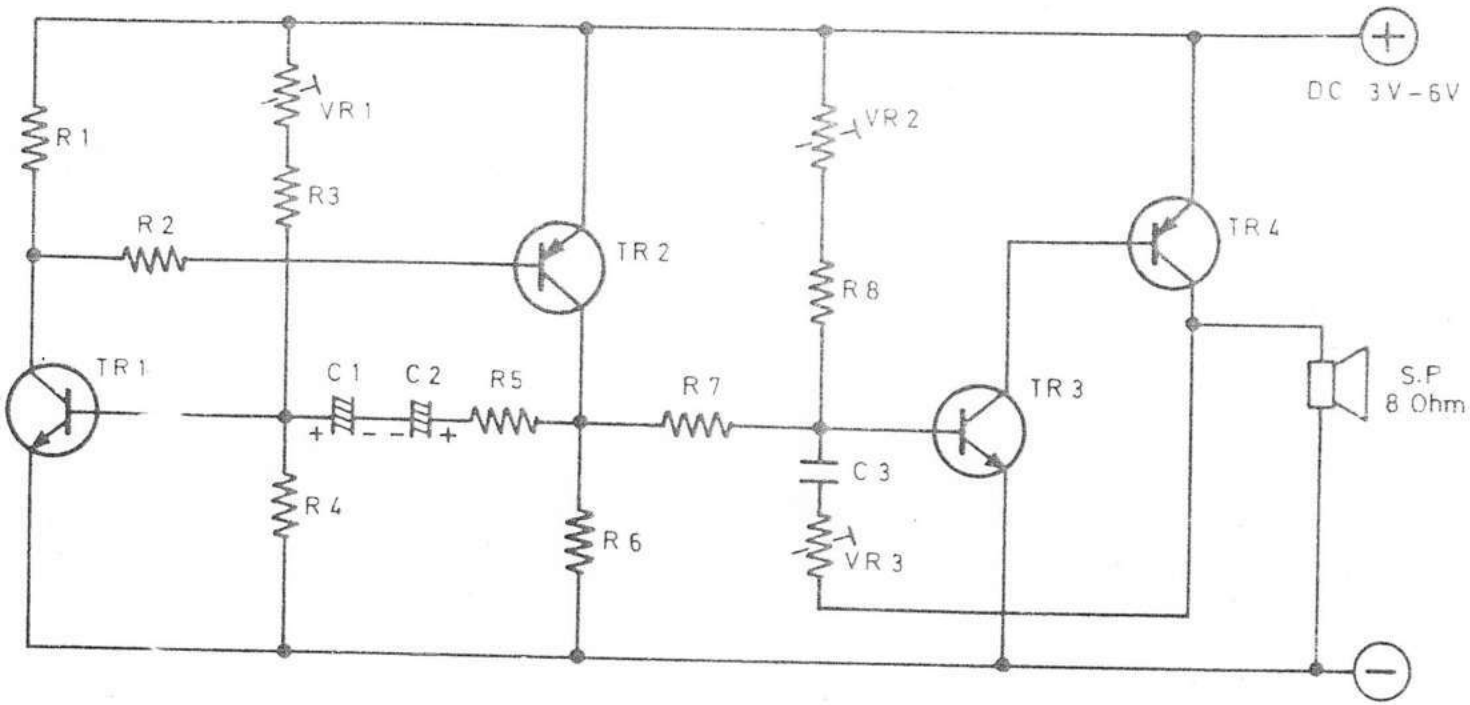

TL - 205A

CIRCUIT DIAGRAM

TL - 206

PARTS LIST

R.1	180
R.2	10K
R.3	27K
R.4.5.7	6K8
R.6	100
R.8	12K
R.9	1
VR.1	100K
VR.2	1K

C.1	47uF/25V
C.2.3	100uF/25V
C.4	0.1uF/25V
C.5	0.22uF/25V
TR.1	FCS 9013
TR.2	FCS 9012
TR.3	2N 3569
D.	1N 4002
Output Transformer	OT – 240

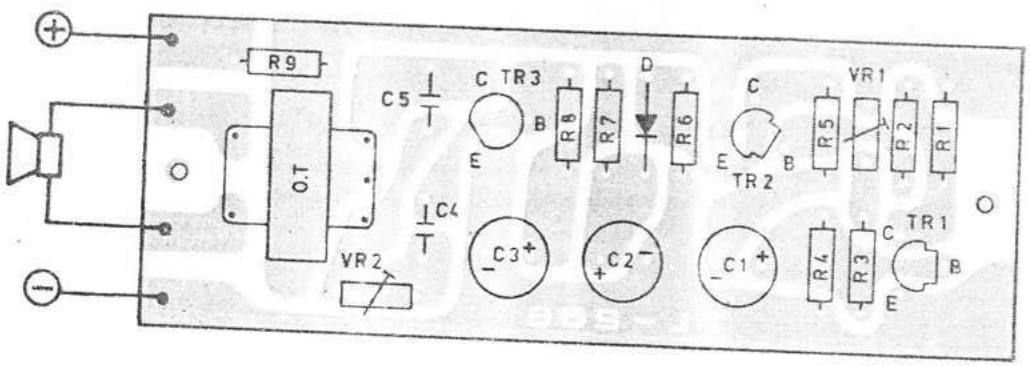

ELECTRONIC ALARM

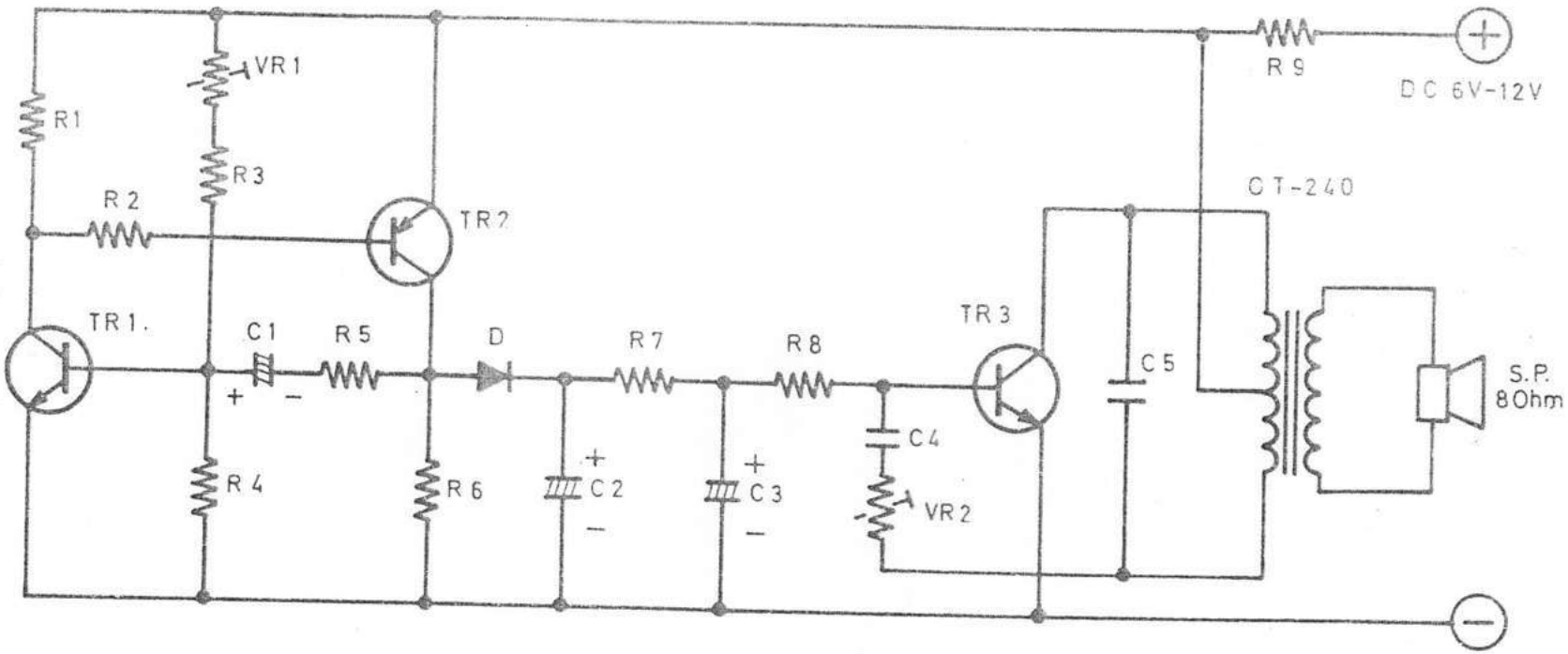

TL - 206

CIRCUIT DIAGRAM

TL - 206A

PARTS LIST

R.1	470
R.2	22K
R.3.8	10K
R.4	27K
R.5	2K2
R.6	120
R.7	4K7
VR.1	100K
VR.2	1 K
C.1.3	100uF/10V
C.2	220uF/10V
C.4	0.1uF/10V
D	1N 4002
TR.1.3	FCS 9013
TR.2.4	FCS 9012

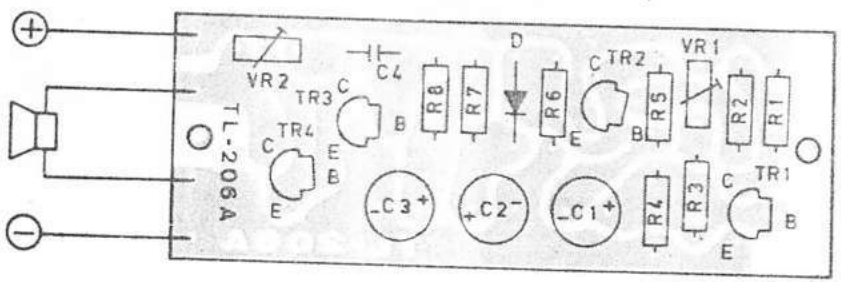

ELECTRONIC ALARM 2.000.-

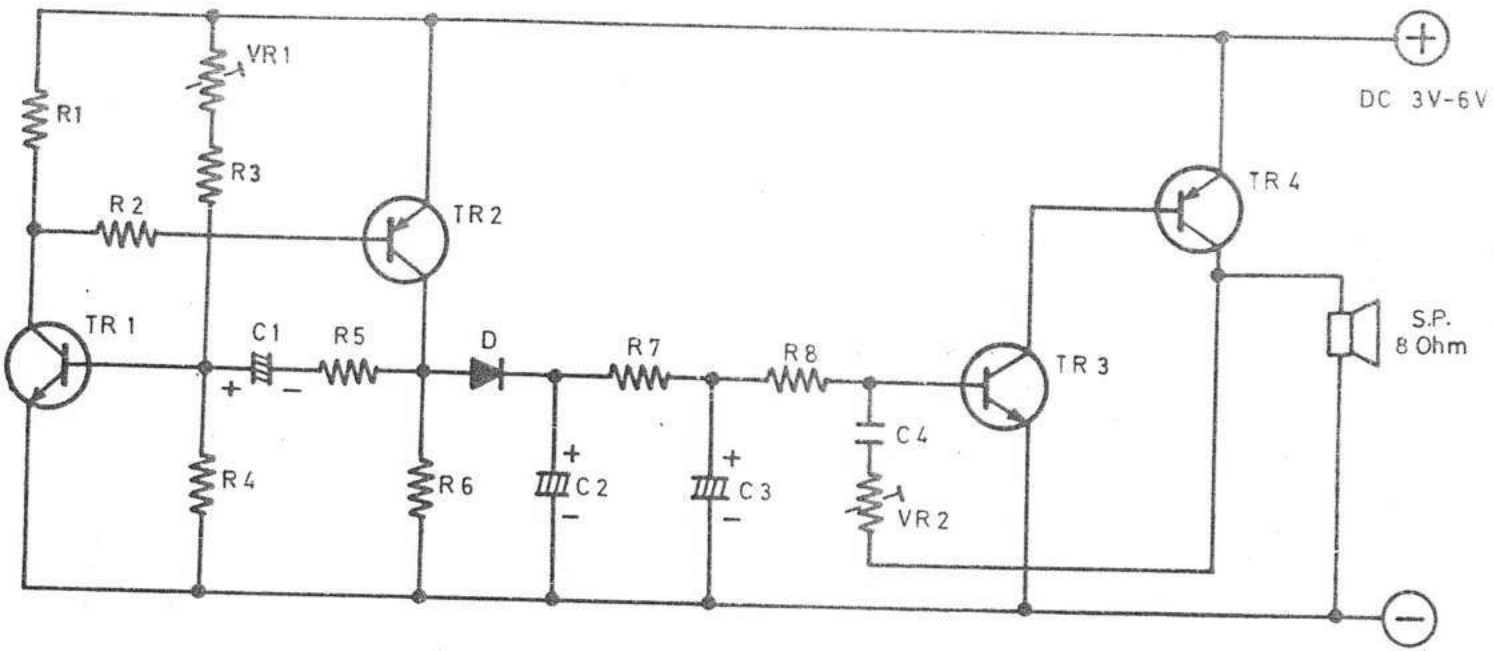

TL - 206A

CIRCUIT DIAGRAM

TL - 207

PARTS LIST

R.1	470
R.2	22K
R.3	27K
R.4	10K
R.5	3K3
R.6	120
R.7	1K5
R.8	270
VR.1	100K
VR.2	10K

C.1	220uF
C.2	100uF
C3	47uF
C.4	0,1uF
TR1.3	FCS 9013
TR 2	FCS 9012
TR 4	2N 4355
T	P: 200 ohm S: 5K ohm
D	1N 4002

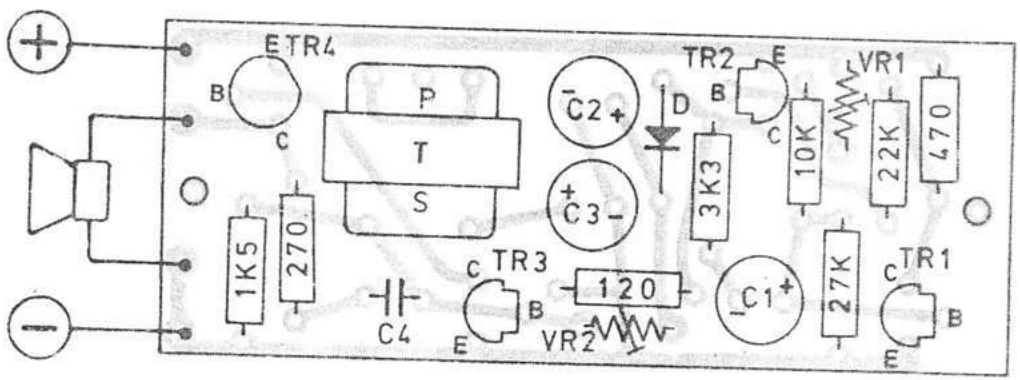

ELECTRONIC BIRD SOUND
(SUARA BURUNG)

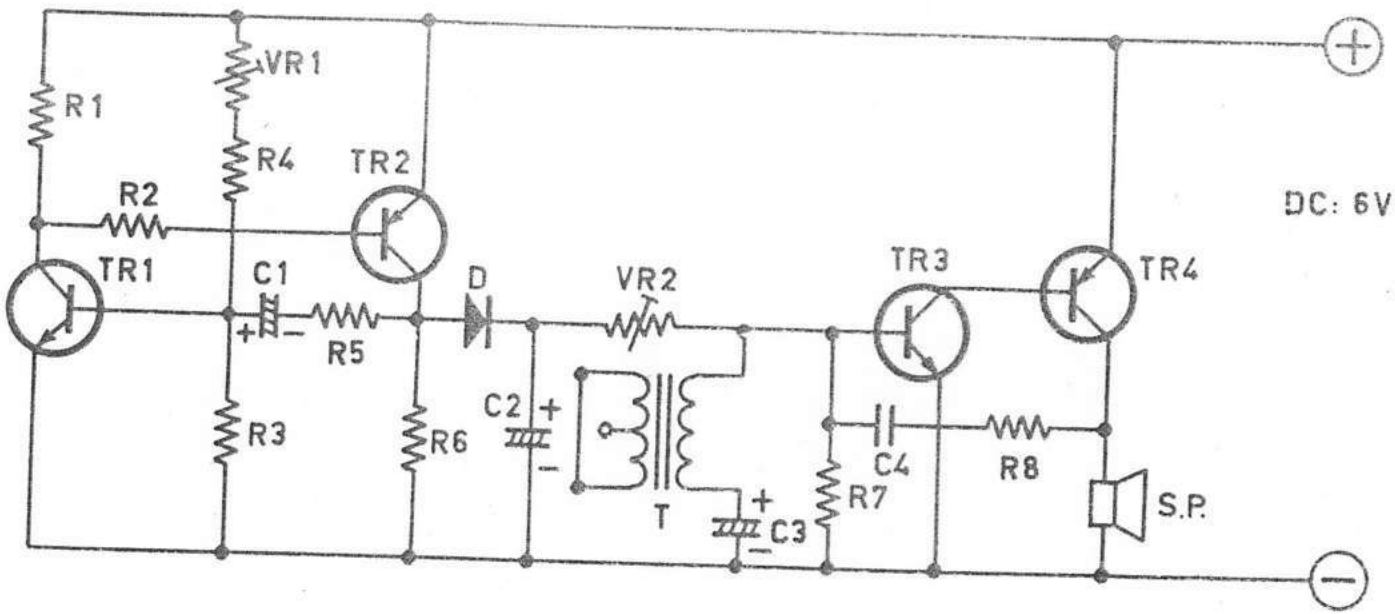

TL - 207

CIRCUIT DIAGRAM

TL - 220

PARTS LIST

R.1	10K
R.2	8K2
R.3	47K
R.4	10K
R.5	1 K
C.1	220uF/16V
C.2	0.005uF/600V
VR.	22K
D.1.2	1N 4002
D.3	S — 04
TR.	FCS 9013
SPD.	MEL 11
SCR.	C10/FIR3D41

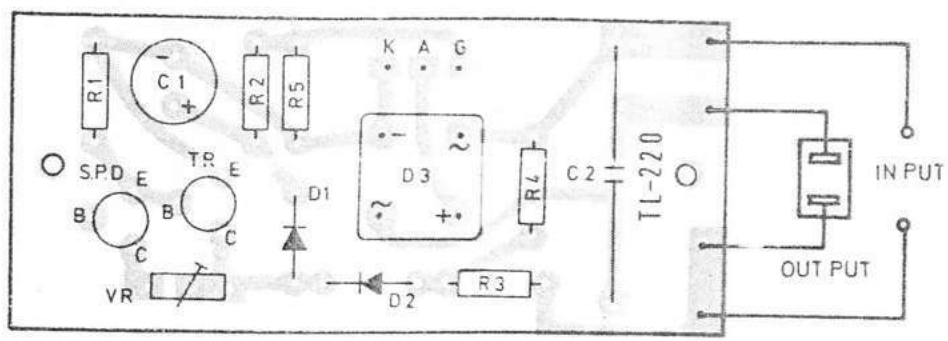

LIGHT CONTROL SWITCH

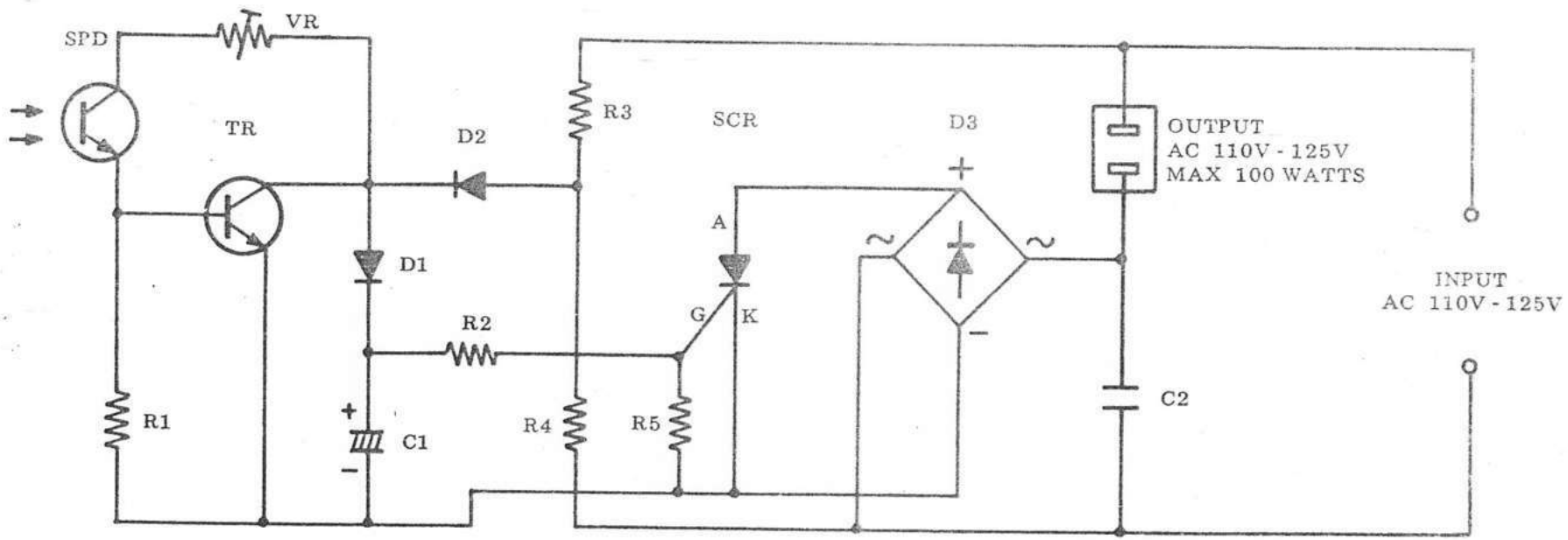

TL - 220

CIRCUIT DIAGRAM

FM WIRELESS MICROPHONE

R.1	1,5K
R.2	150
R.3	10K
R.4	4,7K
R.5	390
C.1.5.6	2,2KpF
C.2.3.4	10pF
C.7	2,2uF
TR.1.2	C 838

CONDENSER MIC

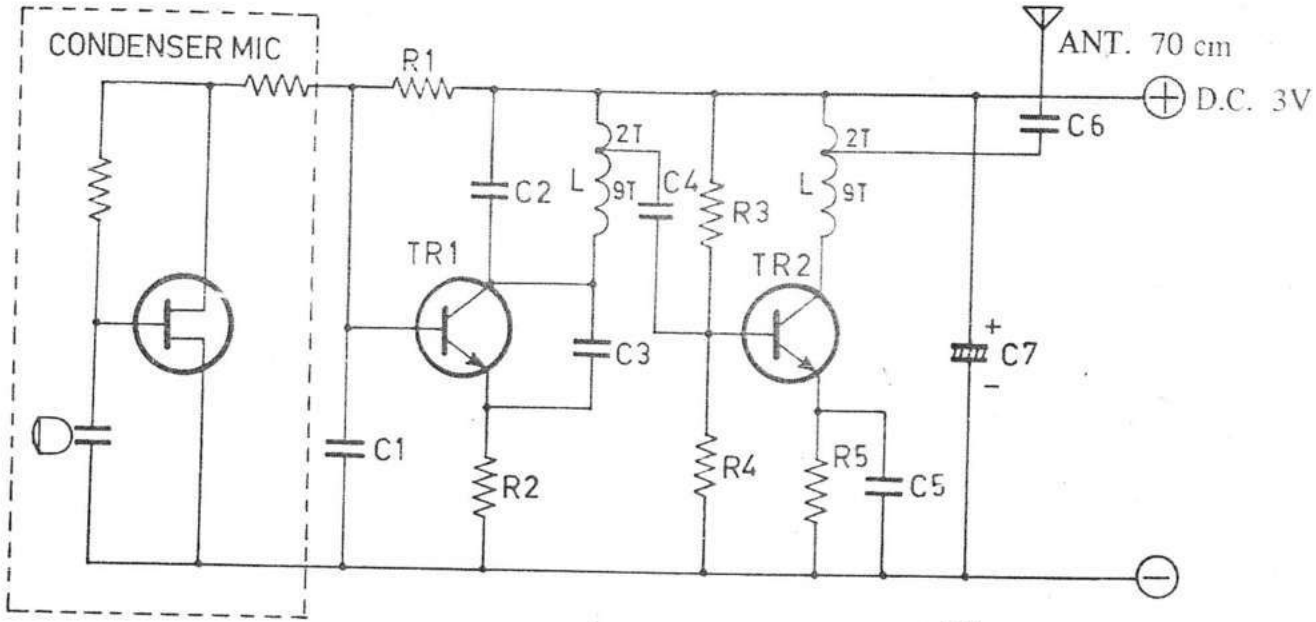

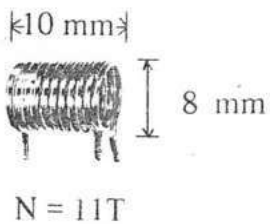

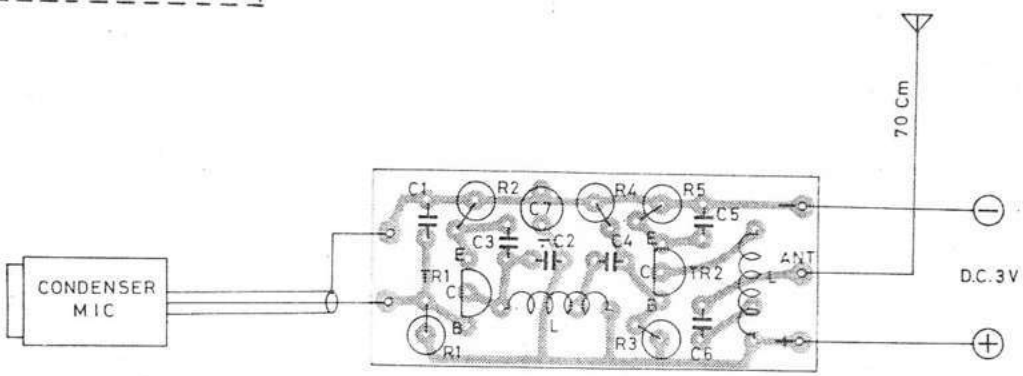

88 MHz — 108 MHz

DC - DC CONVERTER

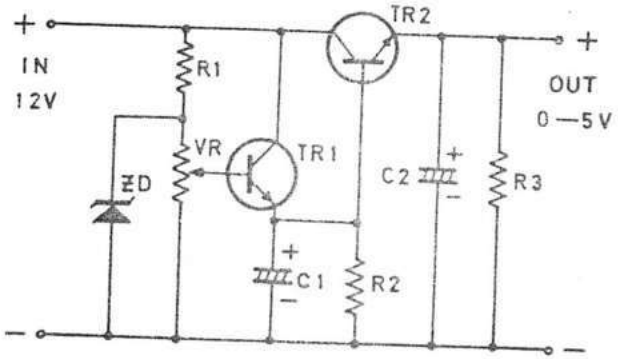

R 1	150
R 2,3	10K
VR	2K
C 1	10uf
C 2	100uf
TR 1	FCS-9014
TR 2	BC141
ZD	5.6V

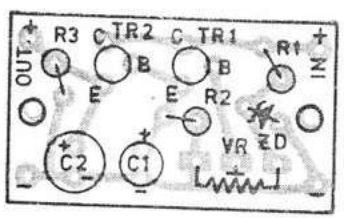

VU METER

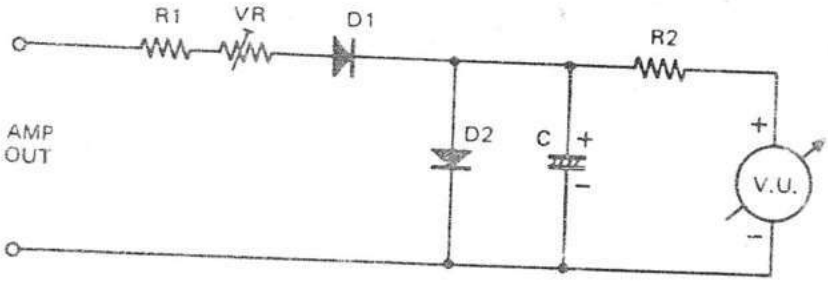

R1.2	330
VR	100K
C	10uf10V
D1.2	1N 4002

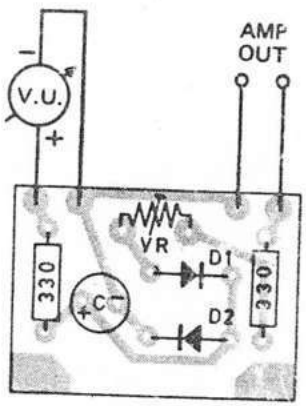

T.V. GAME

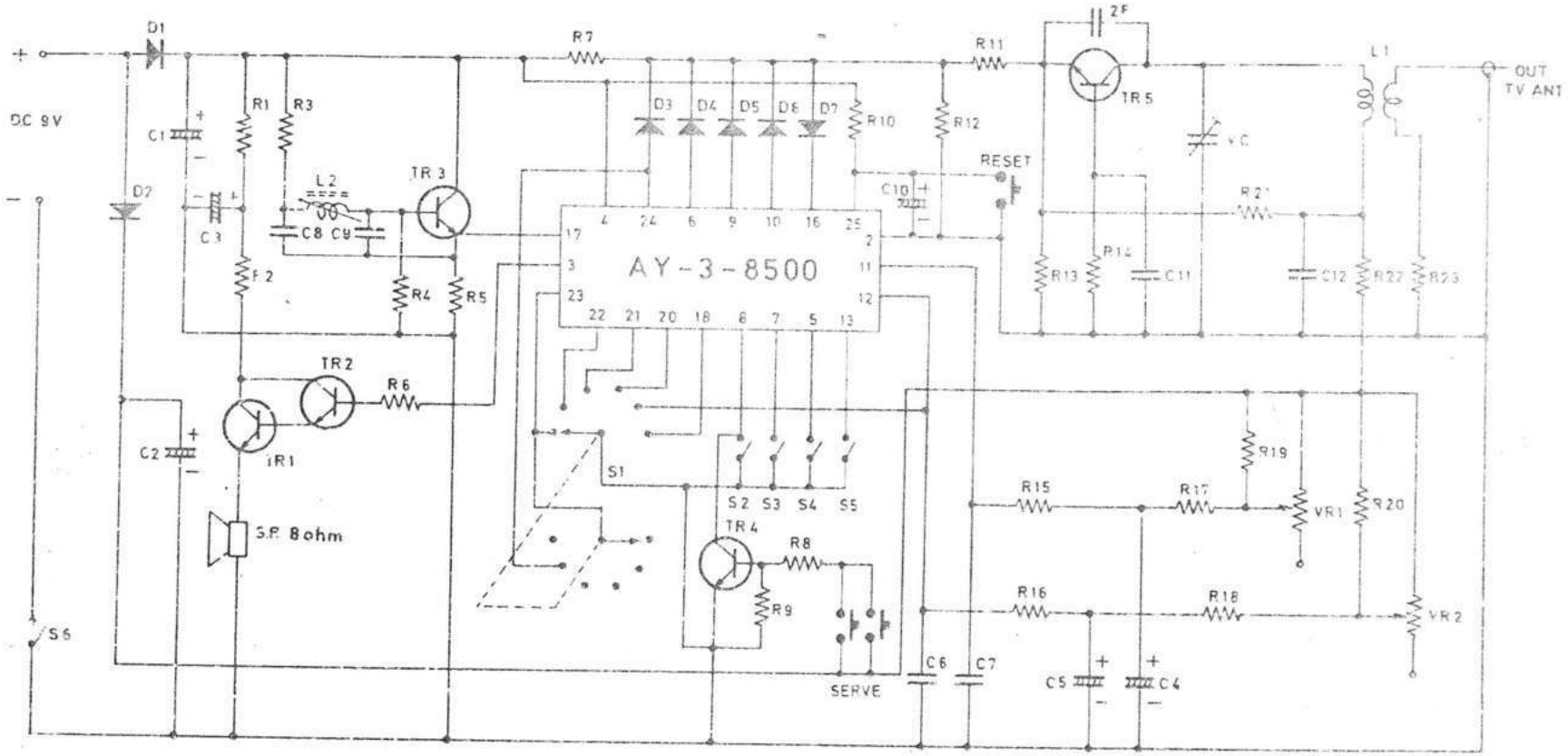

TL-1002

CIRCUIT DIAGRAM

TL-1002

PARTS LIST

R.1.8	2K2
R.2	10
R.3	18K
R.4	470K
R.5.13.14.15.16.22	1 K
R.6	1 M5
R.7.12	10K
R.9	47K
R.10	22K
R.11	15K
R.17.18	33K
R.19.20	82K
R.21	3K3
R.23	330
VR.1.2	B100K
C.1.2.3	1000uF/16V
C.4.5	1uF/35V
C.6.7	0.1uF/50V
C.8.	22pF/10V
C.9	33pF/10V
C.10	2.2uF/16V
C.11	390pF/10V
C.12	1 KpF/10V
VC	15pF
TR.1.2	BC109C
TR.3.5	C838
TR.4	FCS9013
IC	AY-3-8500
D.1.2	1 N4002
D.3.4.5.6.7	CDG24
L.1	75uuH
L.2	300uH

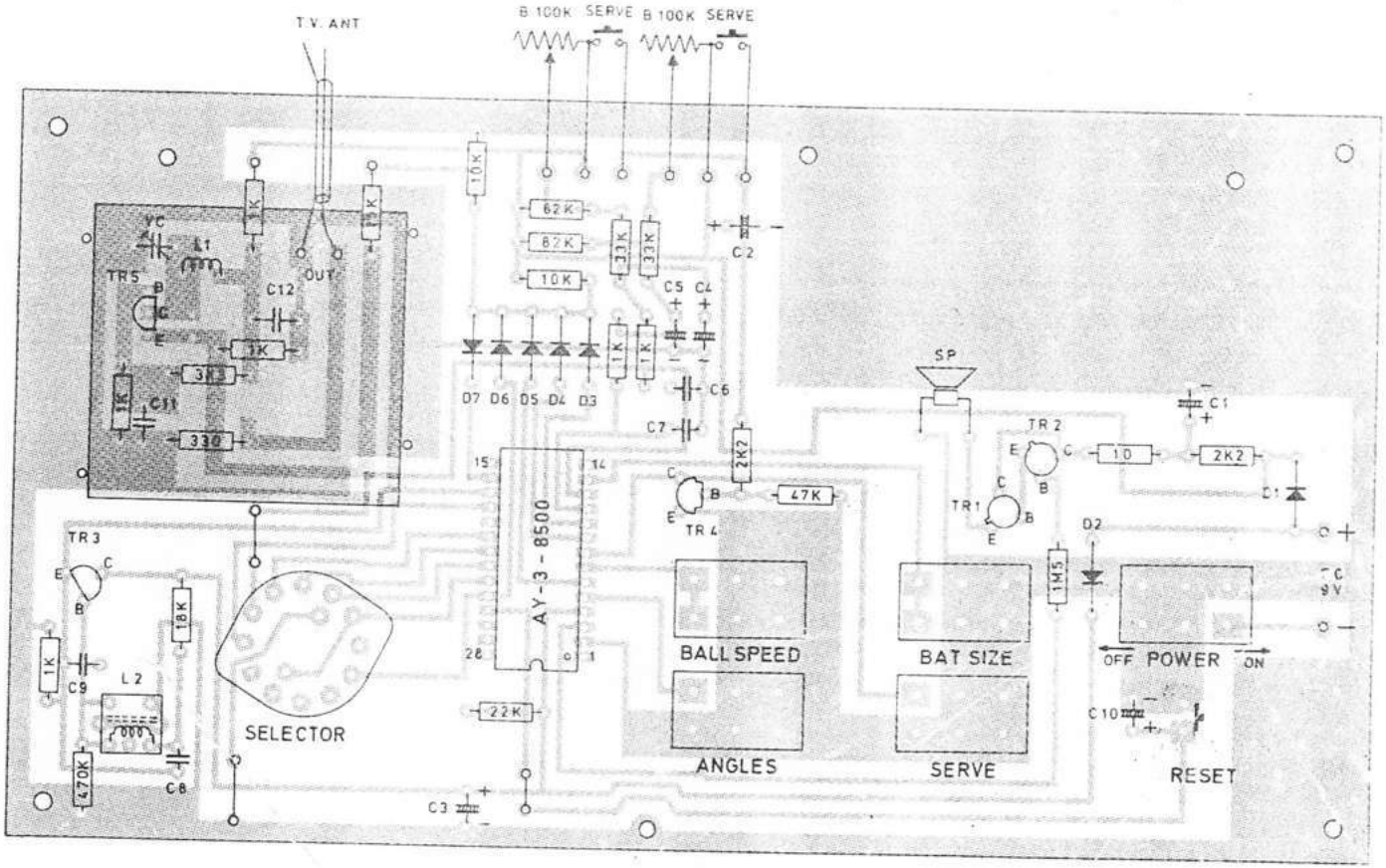

T.V. GAME

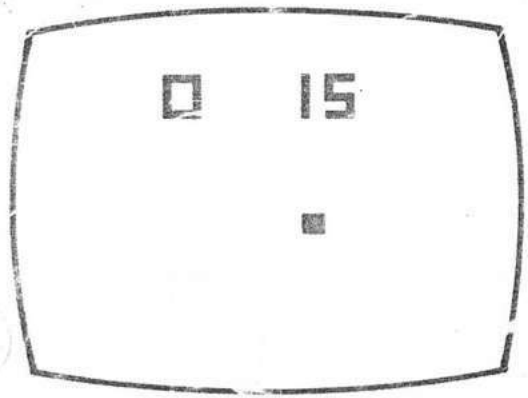

1. SHOOTING

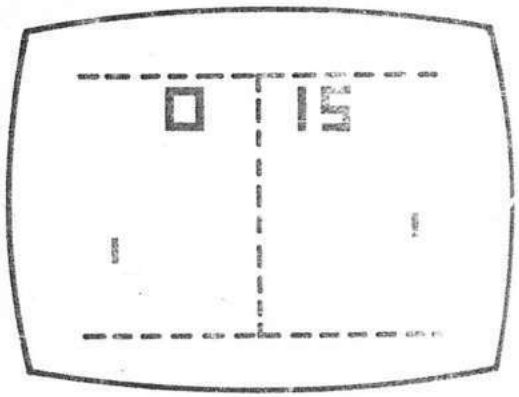

3. TENNIS

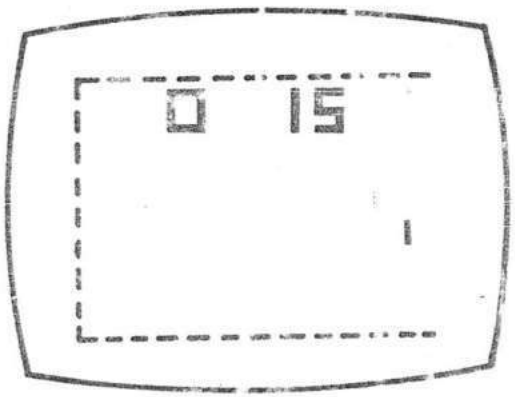

5. SQUASH

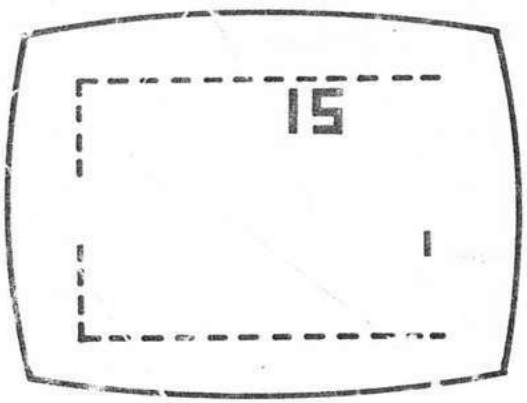

2. BOWLING

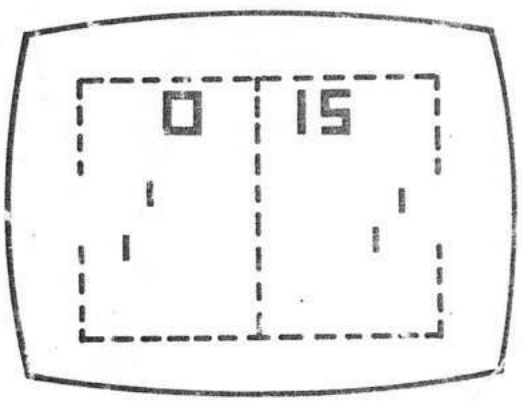

4. HOCKEY

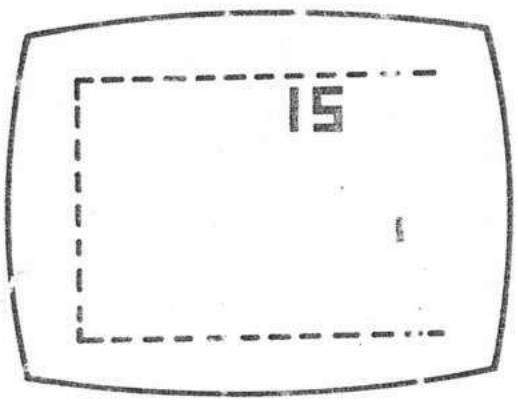

6. SOLO

TL-1002

2N 2646	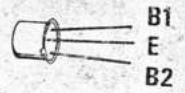
BC 107 BC 109 2N 2222A 2N 414	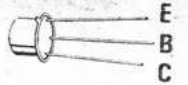
FCS 9012 FCS 9013 FCS 9014 FCS 9015 SE 4010	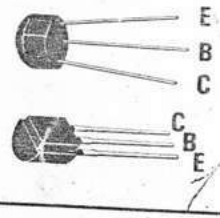
BC 141 BC 160 BC 161	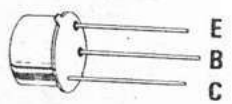
2N 3569 2N 4355	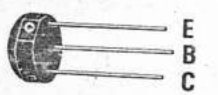
Q 4004LT Q 4006LT	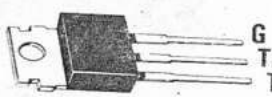
C 838	
C 1162	

2SB 178	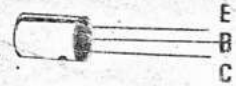
C 1061 D 317 B 512	
2SB 337 2SB 407 MJ 2955 MJ 4502 2N 3055	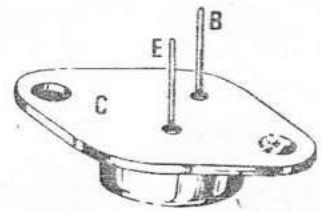
SPD MEL 11 MEL 12	
PUT MEU 21	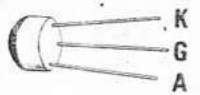
FOR 2B F7-21S	
T 103 C 10	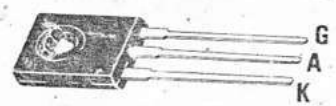
2N 5061 EC 103D	

DISCOTIC LAMP

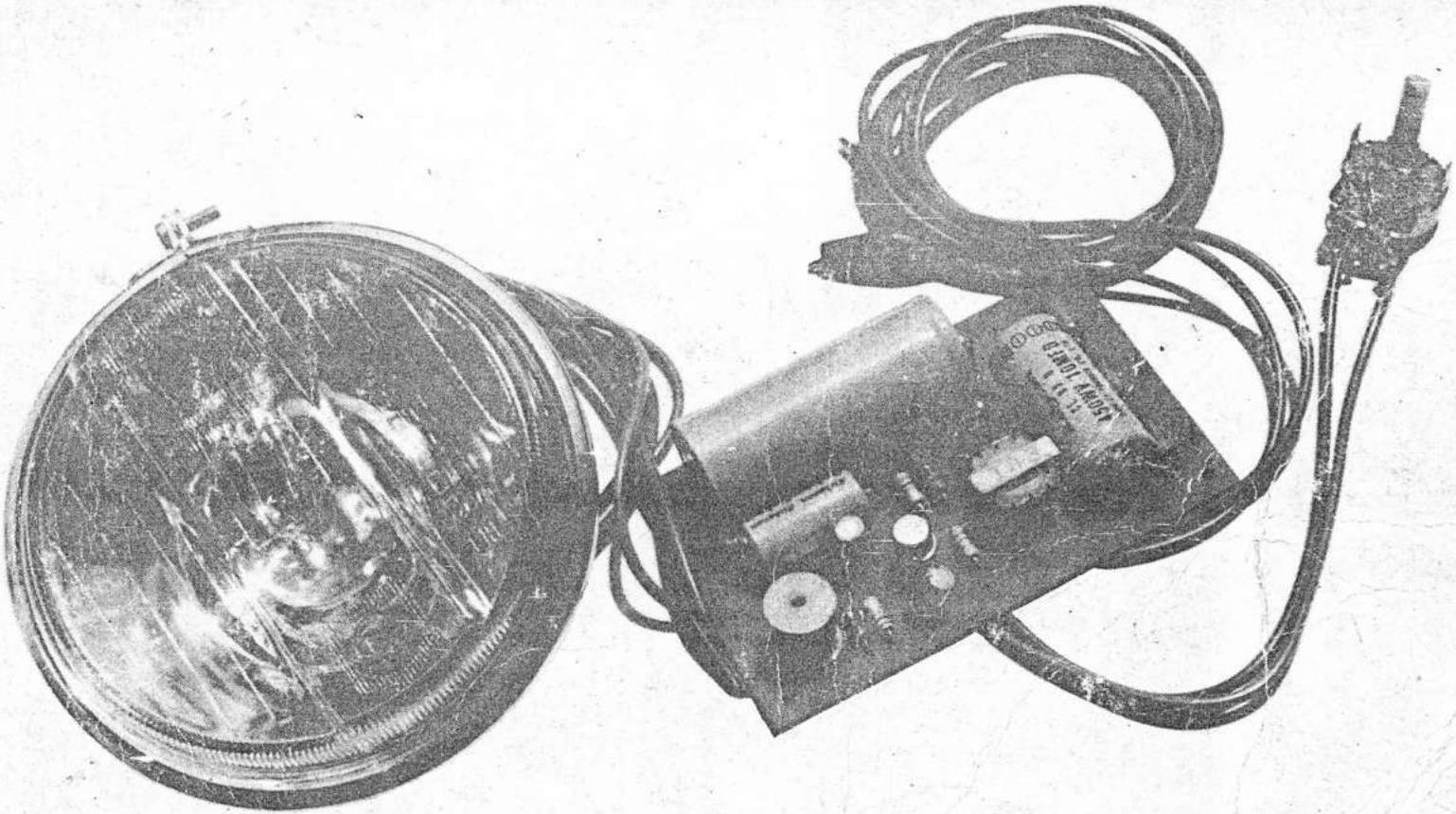

BERKEDIP SEIRAMA DENGAN NADA RENDAH

TULUS CROSSOVER

2 WAY - 3 WAY

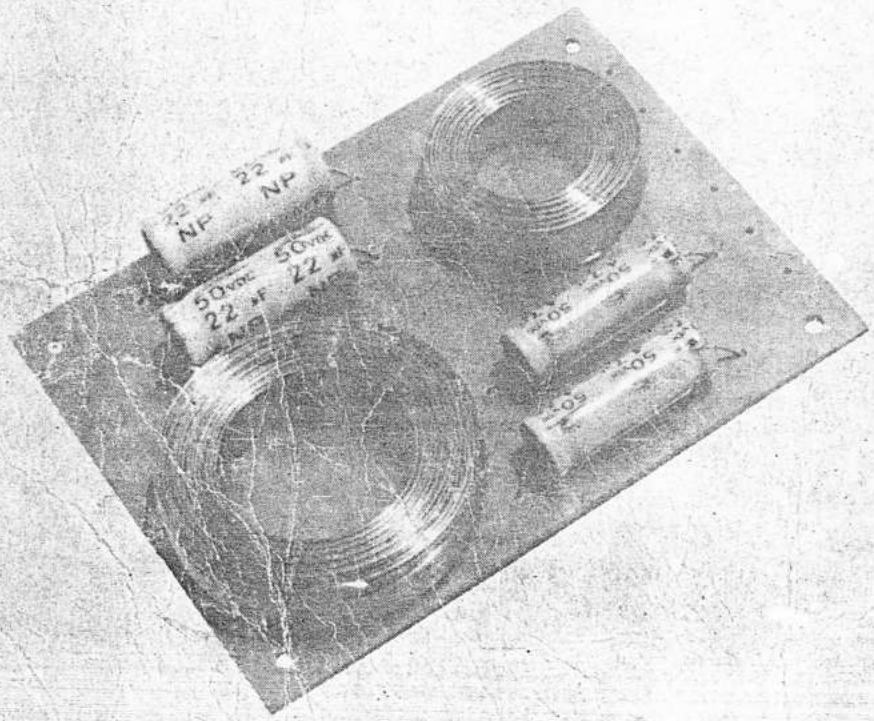

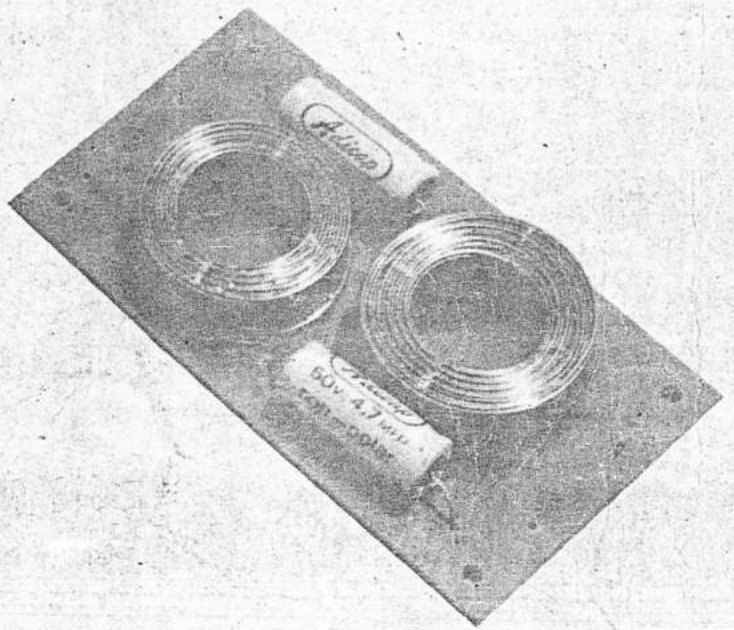

MUTU TINGGI